JVC

SERVICE MANUAL

MICRO COMPONENT SYSTEM

UX-G33B,UX-G33E,UX-G33EN, UX-G33EV,UX-G30B,UX-G30E, UX-G30EN,UX-G30EV

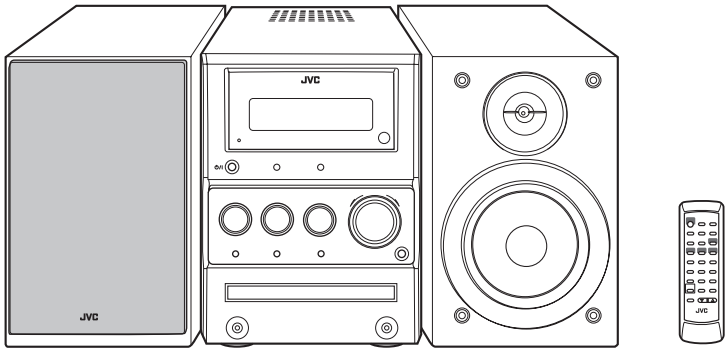

COMPACT disc DIGITAL AUDIO MP3 PLAYBACK Radio Data System

Lead free solder used in the board (material : Sn-Ag-Cu, melting point : 219 Centigrade)

TABLE OF CONTENTS

1 PRECAUTION 1-3
2 SPECIFIC SERVICE INSTRUCTIONS 1-7
3 DISASSEMBLY 1-8
4 ADJUSTMENT 1-19
5 TROUBLE SHOOTING 1-20

COPYRIGHT © 2006 Victor Company of Japan, Limited

No.MB522
2006/4

SPECIFICATION

Amplifier section	Output Power		60 W (30 W + 30 W) at 6Ω (10% THD)
	Speakers/Impedance		6Ω - 16Ω
	Audio Input	AUX LVL 1	500 mV/50 kΩ
		AUX LVL 2	250 mV/50 kΩ
		AUX LVL 3	125 mV/50 kΩ
Tuner section	FM tuning range		87.50 MHz - 108.00 MHz
	AM (MW) tuning range		522 kHz - 1 629 kHz
CD player section	Dynamic range		88 dB
	Signal-to-noise ratio		93 dB
	Wow and flutter		Immeasurable
Speakers	Speaker units		10 cm cone × 1 + 1.5 cm dome × 1
	Impedance		6Ω
	Dimensions (approx.)		140 mm × 231 mm × 195 mm (W/H/D)
	Mass (approx.)		1.7 kg each
General	Power requirement		AC 230 V , 50 Hz
	Power consumption		60 W (at operation) 11 W (on standby/display on) 0.95 W (on standby/display off)
	Dimensions (approx.)		165 mm × 231 mm × 328 mm (W/H/D)
	Mass (approx.)		4.1 kg

Design and specifications are subject to change without notice.

SECTION 1
PRECAUTION

1.1 Safety Precautions

(1) This design of this product contains special hardware and many circuits and components specially for safety purposes. For continued protection, no changes should be made to the original design unless authorized in writing by the manufacturer. Replacement parts must be identical to those used in the original circuits. Services should be performed by qualified personnel only.

(2) Alterations of the design or circuitry of the product should not be made. Any design alterations of the product should not be made. Any design alterations or additions will void the manufacturers warranty and will further relieve the manufacture of responsibility for personal injury or property damage resulting therefrom.

(3) Many electrical and mechanical parts in the products have special safety-related characteristics. These characteristics are often not evident from visual inspection nor can the protection afforded by them necessarily be obtained by using replacement components rated for higher voltage, wattage, etc. Replacement parts which have these special safety characteristics are identified in the Parts List of Service Manual. Electrical components having such features are identified by shading on the schematics and by (⚠) on the Parts List in the Service Manual. The use of a substitute replacement which does not have the same safety characteristics as the recommended replacement parts shown in the Parts List of Service Manual may create shock, fire, or other hazards.

(4) The leads in the products are routed and dressed with ties, clamps, tubings, barriers and the like to be separated from live parts, high temperature parts, moving parts and/or sharp edges for the prevention of electric shock and fire hazard. When service is required, the original lead routing and dress should be observed, and it should be confirmed that they have been returned to normal, after reassembling.

(5) Leakage shock hazard testing
After reassembling the product, always perform an isolation check on the exposed metal parts of the product (antenna terminals, knobs, metal cabinet, screw heads, headphone jack, control shafts, etc.) to be sure the product is safe to operate without danger of electrical shock.Do not use a line isolation transformer during this check.

- Plug the AC line cord directly into the AC outlet. Using a "Leakage Current Tester", measure the leakage current from each exposed metal parts of the cabinet, particularly any exposed metal part having a return path to the chassis, to a known good earth ground. Any leakage current must not exceed 0.5mA AC (r.m.s.).
- Alternate check method
  Plug the AC line cord directly into the AC outlet. Use an AC voltmeter having, 1,000Ω per volt or more sensitivity in the following manner. Connect a 1,500Ω 10W resistor paralleled by a 0.15μF AC-type capacitor between an exposed metal part and a known good earth ground.
  Measure the AC voltage across the resistor with the AC voltmeter.
  Move the resistor connection to each exposed metal part, particularly any exposed metal part having a return path to the chassis, and measure the AC voltage across the resistor. Now, reverse the plug in the AC outlet and repeat each measurement. Voltage measured any must not exceed 0.75 V AC (r.m.s.). This corresponds to 0.5 mA AC (r.m.s.).

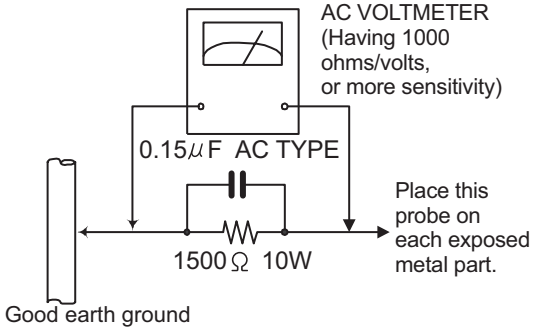

1.2 Warning

(1) This equipment has been designed and manufactured to meet international safety standards.
(2) It is the legal responsibility of the repairer to ensure that these safety standards are maintained.
(3) Repairs must be made in accordance with the relevant safety standards.
(4) It is essential that safety critical components are replaced by approved parts.
(5) If mains voltage selector is provided, check setting for local voltage.

1.3 Caution

Burrs formed during molding may be left over on some parts of the chassis.
Therefore, pay attention to such burrs in the case of preforming repair of this system.

1.4 Critical parts for safety

In regard with component parts appearing on the silk-screen printed side (parts side) of the PWB diagrams, the parts that are printed over with black such as the resistor (▬), diode (▮) and ICP (●) or identified by the " ⚠ " mark nearby are critical for safety. When replacing them, be sure to use the parts of the same type and rating as specified by the manufacturer.
(This regulation dose not Except the J and C version)

1.5 Safety Precautions (U.K only)

(1) This design of this product contains special hardware and many circuits and components specially for safety purposes. For continued protection, no changes should be made to the original design unless authorized in writing by the manufacturer. Replacement parts must be identical to those used in the original circuits.
(2) Any unauthorised design alterations or additions will void the manufacturer's guarantee; furthermore the manufacturer cannot accept responsibility for personal injury or property damage resulting therefrom.
(3) Essential safety critical components are identified by (⚠) on the Parts List and by shading on the schematics, and must never be replaced by parts other than those listed in the manual. Please note however that many electrical and mechanical parts in the product have special safety related characteristics. These characteristics are often not evident from visual inspection. Parts other than specified by the manufacturer may not have the same safety characteristics as the recommended replacement parts shown in the Parts List of the Service Manual and may create shock, fire, or other hazards.
(4) The leads in the products are routed and dressed with ties, clamps, tubings, barriers and the like to be separated from live parts, high temperature parts, moving parts and/or sharp edges for the prevention of electric shock and fire hazard. When service is required, the original lead routing and dress should be observed, and it should be confirmed that they have been returned to normal, after re-assembling.

1.5.1 Warning

(1) Service should be performed by qualified personnel only.
(2) This equipment has been designed and manufactured to meet international safety standards.
(3) It is the legal responsibility of the repairer to ensure that these safety standards are maintained.
(4) Repairs must be made in accordance with the relevant safety standards.
(5) It is essential that safety critical components are replaced by approved parts.
(6) If mains voltage selector is provided, check setting for local voltage.

⚠ ***CAUTION*** **Burrs formed during molding may be left over on some parts of the chassis. Therefore, pay attention to such burrs in the case of preforming repair of this system.**

1.6 Preventing static electricity

Electrostatic discharge (ESD), which occurs when static electricity stored in the body, fabric, etc. is discharged, can destroy the laser diode in the traverse unit (optical pickup). Take care to prevent this when performing repairs.

1.6.1 Grounding to prevent damage by static electricity

Static electricity in the work area can destroy the optical pickup (laser diode) in devices such as laser products.
Be careful to use proper grounding in the area where repairs are being performed.

(1) Ground the workbench
Ground the workbench by laying conductive material (such as a conductive sheet) or an iron plate over it before placing the traverse unit (optical pickup) on it.

(2) Ground yourself
Use an anti-static wrist strap to release any static electricity built up in your body.

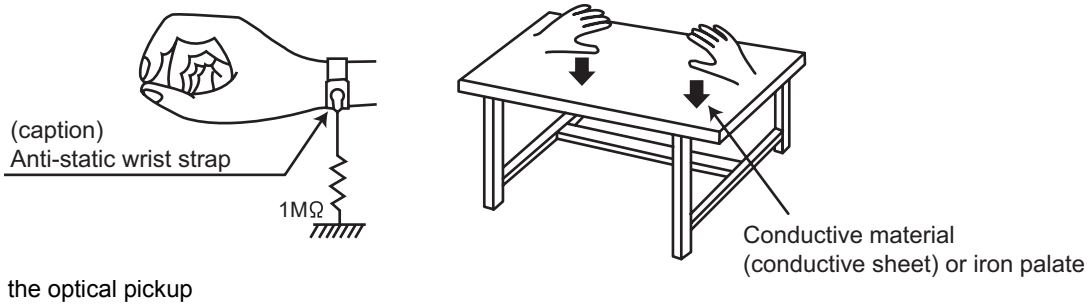

(3) Handling the optical pickup
- In order to maintain quality during transport and before installation, both sides of the laser diode on the replacement optical pickup are shorted. After replacement, return the shorted parts to their original condition.
(Refer to the text.)
- Do not use a tester to check the condition of the laser diode in the optical pickup. The tester's internal power source can easily destroy the laser diode.

1.7 Handling the traverse unit (optical pickup)

(1) Do not subject the traverse unit (optical pickup) to strong shocks, as it is a sensitive, complex unit.
(2) Cut off the shorted part of the flexible cable using nippers, etc. after replacing the optical pickup. For specific details, refer to the replacement procedure in the text. Remove the anti-static pin when replacing the traverse unit. Be careful not to take too long a time when attaching it to the connector.
(3) Handle the flexible cable carefully as it may break when subjected to strong force.
(4) I t is not possible to adjust the semi-fixed resistor that adjusts the laser power. Do not turn it.

1.8 Attention when traverse unit is decomposed

***Please refer to "Disassembly method" in the text for the pickup unit.**

- Apply solder to the short land sections before the flexible wire is disconnected from the connecto on the servo board. (If the flexible wire is disconnected without applying solder, the pickup may be destroyed by static electricity.)
- In the assembly, be sure to remove solder from the short land sections after connecting the flexible wire.

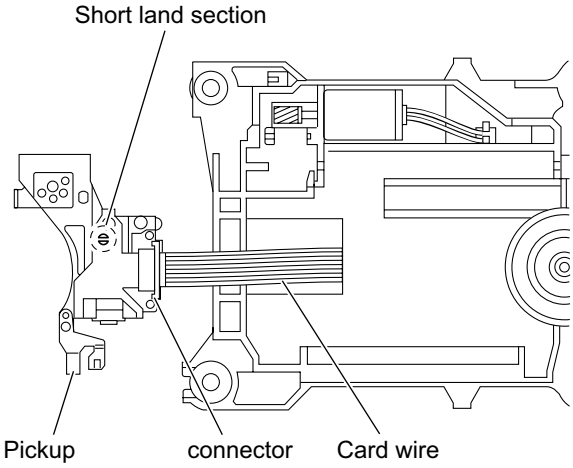

1.9 Important for laser products

1.9 Important for laser products

1. **CLASS 1 LASER PRODUCT**
2. **DANGER :** Invisible laser radiation when open and inter lock failed or defeated. Avoid direct exposure to beam.
3. **CAUTION :** There are no serviceable parts inside the Laser Unit. Do not disassemble the Laser Unit. Replace the complete Laser Unit if it malfunctions.
4. **CAUTION :** The CD,MD and DVD player uses invisible laser radiation and is equipped with safety switches which prevent emission of radiation when the drawer is open and the safety interlocks have failed or are defeated. It is dangerous to defeat the safety switches.
5. **CAUTION :** If safety switches malfunction, the laser is able to function.
6. **CAUTION :** Use of controls, adjustments or performance of procedures other than those specified here in may result in hazardous radiation exposure.

⚠ ***CAUTION*** **Please use enough caution not to see the beam directly or touch it in case of an adjustment or operation check.**

CAUTION : VISIBLE AND / OR INVISIBLE CLASS 1M LASER RADIATION WHEN OPEN.
DO NOT STARE INTO BEAM OR VIEW DIRECTLY WITH OPTICAL INSTRUMENTS.

VARNING : SYNLIG OCH / ELLR OSYNLIG LASERSTRÅLING, KLASS 1M, NÄR DENNA DEL ÄR ÖPPNAD.
STIRRA EJ IN I STRÅLEN OCH BETRAKTA EJ STRÅLEN MED OPTISKA INSTRUMENT.

AVISO : RADIACIÓN LÁSER DE CLASE 1M VISIBLE Y/O INVISIBLE CUANDO ESTÁ ABIERTO.
NO MIRAR FIJAMENTE EL HAZ NI OBSERVAR DIRECTAMENTE CON INSTRUMENTAL ÓPTICO.

ADVARSEL : SYNLIC OG / ELLER USYNLIG KLASSE 1M-LASERSTRÅLING VED ABNING.
SE IKKE IND I STRÅLEN-HELLER IKKE MED OPTISKE INSTRUMENTER.

VARO! : AVAT TAESSA OLET ALT TIINA NÄKYVÄLLE JA / TAI NÄKYMÄT TÖMÄLLE LUOKAN 1M LASERSÄTEILYLLE.
ÄLÄ KATSO SUORAAN SÄTEESEEN TAI TARKASTELE SITÄ OPTISEN LAIT TEEN LÄPI.

ATTENTION : RAYONNEMENT LASER VISIBLE ET / OU INVISIBLE DE CLASSE 1M UNE FOIS OUVERT.
NE PAS FIXER LE FAISCEAU NI REGARDER DIRECTEMENT AVEC DES INSTRUMENTS OPTIQUES.

REPRODUCTION AND POSITION OF LABELS

WARNING LABEL

CAUTION	VARNING	AVISO	ADVARSEL	VARO!	ATTENTION
VISIBLE AND/OR INVISIBLE CLASS 1M LASER RADIATION WHEN OPEN. DO NOT STARE INTO BEAM OR VIEW DIRECTLY WITH OPTICAL INSTRUMENTS. (ENG)	SYNLIG OCH/ELLER OSYNLIG LASERSTRÅLNING, KLASS 1M, NÄR DENNA DEL ÄR ÖPPNAD. STIRRA EJ IN I STRÅLEN OCH BETRAKTA EJ STRÅLEN MED OPTISKA INSTRUMENT. (SWE)	RADIACIÓN LÁSER DE CLASE 1M VISIBLE Y/O INVISIBLE CUANDO ESTÁ ABIERTO.NO MIRAR FIJAMENTE EL HAZ NI OBSERVAR DIRECTAMENTE CON INSTRUMENTAL ÓPTICO. (ESP)	SYNLIG OG/ELLER USYNLIG KLASSE 1M-LASERSTRÅLING VED ÅBNING. SE IKKE IND I STRÅLEN-HELLER IKKE MED OPTISKE INSTRUMENTER. (DNK)	AVAT TAESSA OLET ALT TIINA NÄKYVÄLLE JA/TAI NÄKYMÄT TÖMÄLLE LUOKAN 1M LASERSÄTEILYLLE. ÄLÄ KATSO SUORAAN SÄTEESEEN TAI TARKASTELE SITÄ OPTISEN LAIT TEEN LÄPI. (FIN)	RAYONNEMENT LASER VISIBLE ET/OU INVISIBLE DE CLASSE 1M UNE FOIS OUVERT. NE PAS FIXER LE FAISCEAU NI REGARDER DIRECTEMENT AVEC DES INSTRUMENTS OPTIQUES. LV44603-001A (FRA)

CLASS 1
LASER PRODUCT

CAUTION	VISIBLE AND/OR INVISIBLE CLASS 1M LASER RADIATION WHEN OPEN. DO NOT STARE INTO BEAM OR VIEW DIRECTLY WITH OPTICAL INSTRUMENTS. (ENG)
ATTENTION	RAYONNEMENT LASER VISIBLE ET/OU INVISIBLE DE CLASSE 1M UNE FOIS OUVERT. NE PAS FIXER LE FAISCEAU NI REGARDER DIRECTEMENT AVEC DES INSTRUMENTS OPTIQUES. (FRA)
AVISO	RADIACIÓN LÁSER DE CLASE 1M VISIBLE Y/O INVISIBLE CUANDO ESTÁ ABIERTO.NO MIRAR FIJAMENTE EL HAZ NI OBSERVAR DIRECTAMENTE CON INSTRUMENTAL ÓPTICO. (ESP)
ADVARSEL	SYNLIG OG/ELLER USYNLIG KLASSE 1M-LASERSTRÅLING VED ÅBNING. SE IKKE IND I STRÅLEN-HELLER IKKE MED OPTISKE INSTRUMENTER. (DNK)
VARNING	SYNLIG OCH/ELLER OSYNLIG LASERSTRÅLNING, KLASS 1M, NÄR DENNA DEL ÄR ÖPPNAD. STIRRA EJ IN I STRÅLEN OCH BETRAKTA EJ STRÅLEN MED OPTISKA INSTRUMENT. (SWE)
VARO!	AVAT TAESSA OLET ALT TIINA NÄKYVÄLLE JA/TAI NÄKYMÄT TÖMÄLLE LUOKAN 1M LASERSÄTEILYLLE. ÄLÄ KATSO SUORAAN SÄTEESEEN TAI TARKASTELE SITÄ OPTISEN LAIT TEEN LÄPI. (FIN) LV44603-002A

SECTION 2
SPECIFIC SERVICE INSTRUCTIONS

This service manual does not describe SPECIFIC SERVICE INSTRUCTIONS.

SECTION 3
DISASSEMBLY

3.1 Main body section

3.1.1 Removing the side cover (See Figs.1 and 2)

(1) From the rear side of the main body, remove the four screws **A** attaching the side cover. (See Fig.1.)
(2) From the bottom side of the main body, remove the two screws **B** attaching the side covers. (See Fig.2.)
(3) Remove the both side covers in the direction of the arrow. (See Fig.2.)

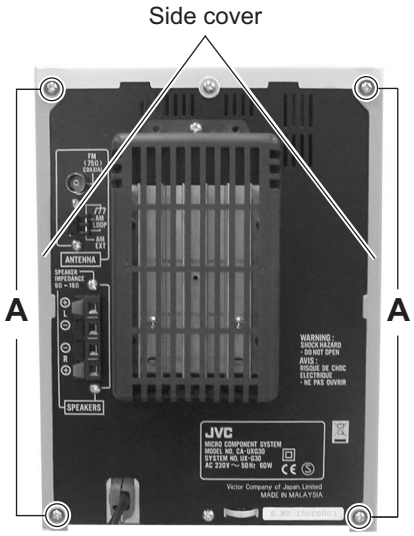

Fig.1

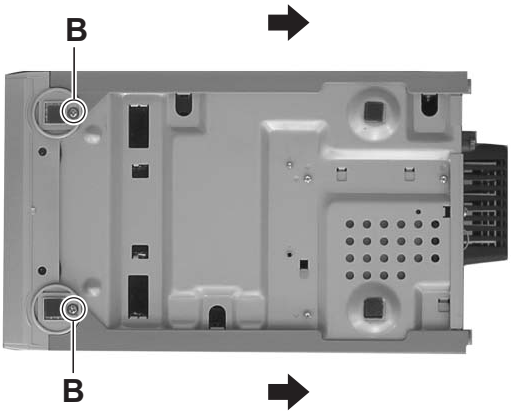

Fig.2

3.1.2 Removing the top cover (See Figs.3 and 4)

- Remove the side covers.
  (1) From the rear side of the main body, remove the screw **C** attaching the top cover. (See Fig.3.)
  (2) From the both side of the main body, remove the two screws **D** attaching the top cover. (See Fig.4.)
  (3) Remove the top cover in the direction of the arrow. (See Fig.4.)

3.1.3 Removing the front panel assembly (See Fig. 4)

- Remove the top cover and side covers.
  (1) From the right side of the main body, disconnect the card wire from the connector CN400 and CN401 on the micon board.
  (2) From the both side of the main body, release the claws **a** of the front panel assembly and then remove the front panel assembly.

3.1.4 Removing the tuner (See Figs.4 and 5)

- Remove the top cover and side covers.
  (1) From the right side of the main body, disconnect the card wire from the connector CN405 on the micon board. (See Fig.4.)
  (2) Remove the two screws **E** attaching the tuner to the rear panel. (See Fig.5.)

3.1.5 Removing the heat sink (See Figs.5 and 6)

- Remove the top cover and side covers.
  (1) From the rear side of the main body, remove the screw **F** attaching the rear cover. (See Fig.5.)
  (2) Release the joint sections **b** and remove the rear cover. (See Fig.6.)
  (3) Remove the two screws **G** and four screws **H** attaching the heat sink. (See Fig.6.)
  (4) Remove the heat sink from the rear panel.

Fig.3

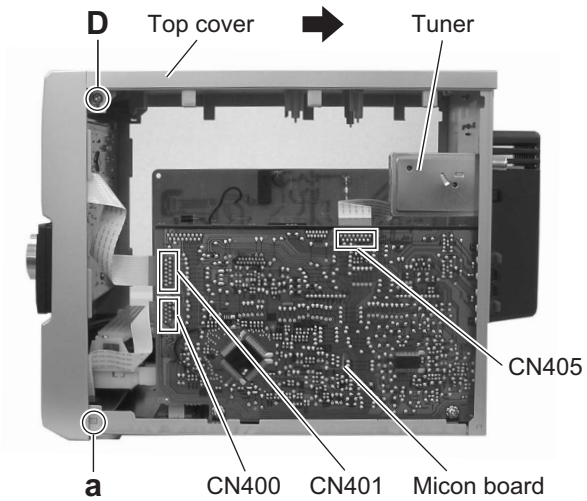

Fig.4

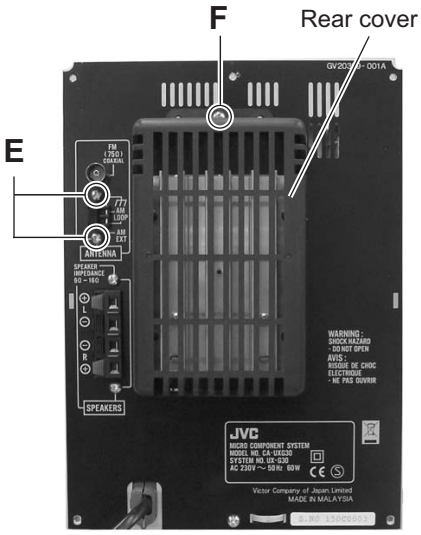

Fig.5

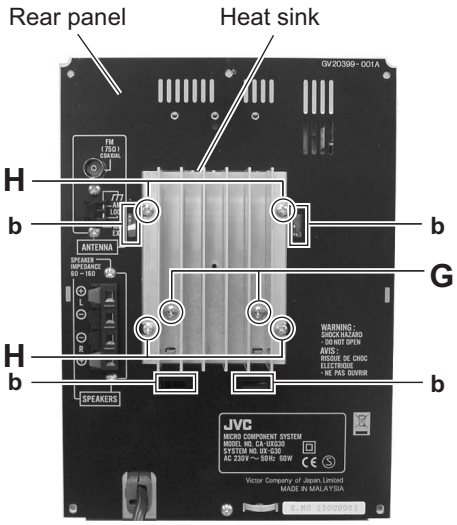

Fig.6

3.1.6 Removing the rear panel (See Fig.7)

- Remove the top cover, side covers, tuner, rear cover and heat sink.
  (1) From the rear side of the main body, remove the screw **J** and two screws **K** attaching the rear panel.
  (2) From the both side of the main body, release the joint sections **c** and remove the rear panel.

3.1.7 Removing the main board (See Figs.7 and 8)

- Remove the top cover, side covers, rear cover and heat sink.
  (1) From the rear side of the main body, remove the two screws **K** attaching the micon board to the rear panel. (See Fig.7.)
  (2) From the right side of the main body, remove the two screws (**M** and **M'**) attaching the micon board to the main body. (See Fig.8.)

  Reference:
  When attaching the screw **M'**, attach the earth wire with it.

  (3) Disconnect the card wires from the connectors (CN400, CN401, CN405, CN406) on the micon board. (See Fig.8.)
  (4) Disconnect the connectors (CN402, CN403) on the micon board from the power amplifier board. (See Fig.8.)

  Note:
  When removing the micon board, take care not to break the claw of the connector on it.

  (5) Remove the micon board from the main body.

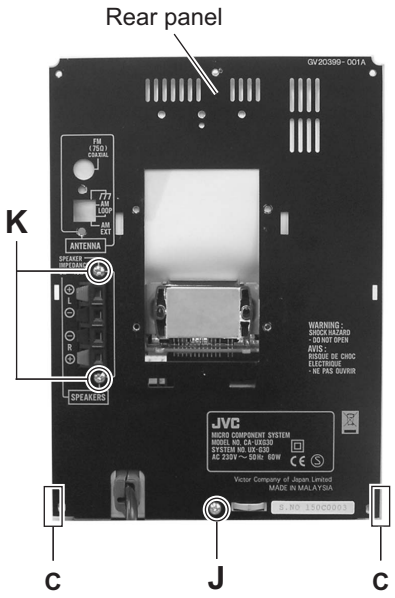

Fig.7

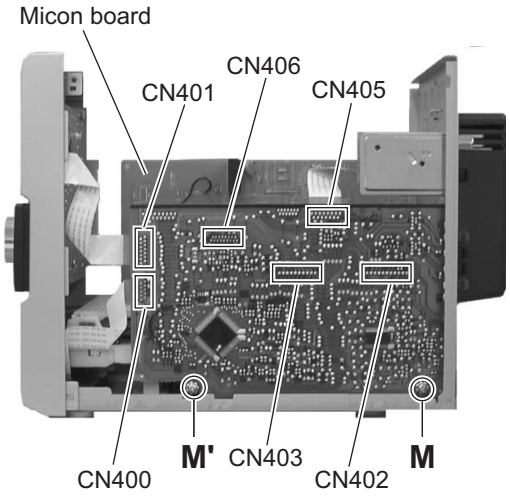

Fig.8

3.1.8 Removing the power amplifier board (See Fig.9)

- Remove the top cover, side covers, tuner, heat sink, rear panel and micon board.
  (1) From the top side of the main body, remove the screw **N** attaching the power amplifier board to the main body.
  (2) Disconnect the connector CN150 on the power amplifier board from the trans board.
  (3) Remove the power amplifier board from the main body.

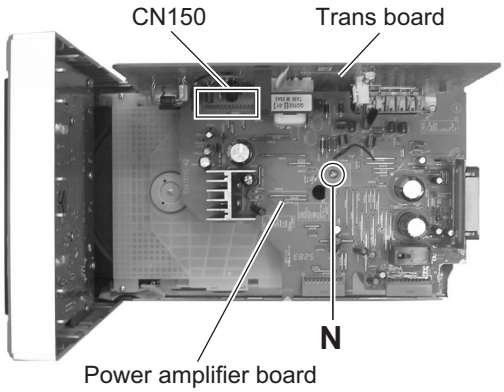

Fig.9

3.1.9 Removing the power supply board and power transformer (See Figs. 10 and 11)

- Remove the top cover, side covers, tuner, heat sink, rear panel, micon board and power amplifier board.
  (1) From the top side of the main body, disconnect the power cord connector CN900 on the trans board. (See Fig.10.)
  (2) Remove the three screws **P** attaching the power transformer from the main body. (See Fig.10.)
  (3) From the left side of the main body, remove the screw **Q** and then remove the trans board and power transformer. (See Fig.11.)

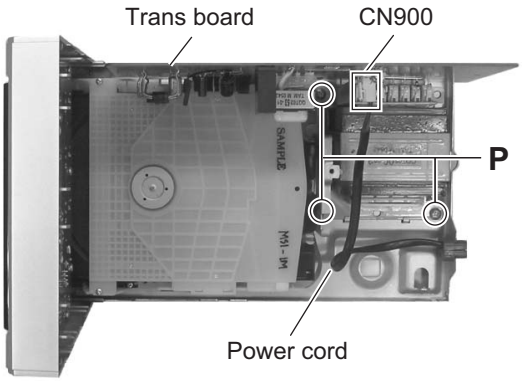

Fig.10

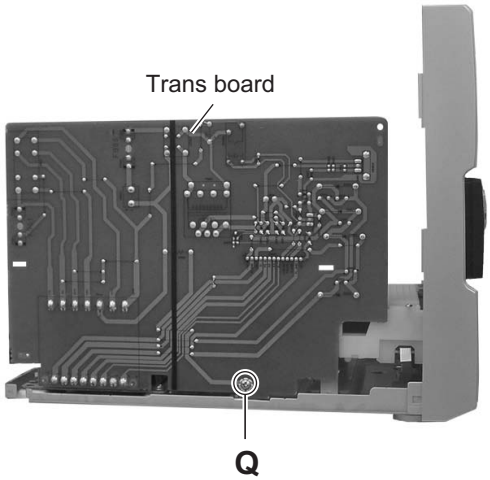

Fig.11

3.1.10 Removing the DVD mechanism assembly (See Fig. 12)

- Remove the top cover, side covers, front panel assembly, tuner, heat sink, rear panel, micon board and power amplifier board.

From the top side of the main body, remove the screw **R** attaching the DVD mechanism assembly and then remove the DVD mechanism assembly from the bottom chassis.

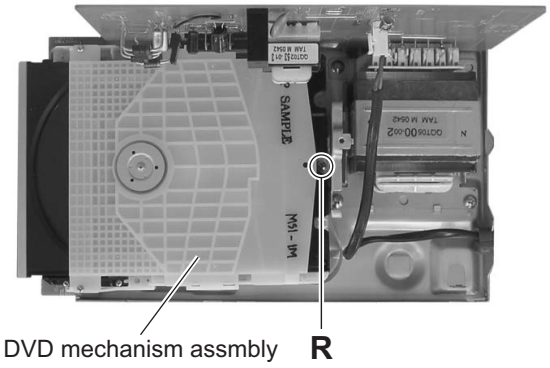

Fig.12

3.1.11 Removing the jack board (See Fig.13)

- Remove the top cover, side covers, front panel assembly, tuner, heat sink, rear panel, micon board, power amplifier board and DVD mechanism assembly.
  (1) From the top side of the main body, remove the two screws **S** attaching the jack board on the bottom chassis.
  (2) Remove the jack board from the bottom chassis.

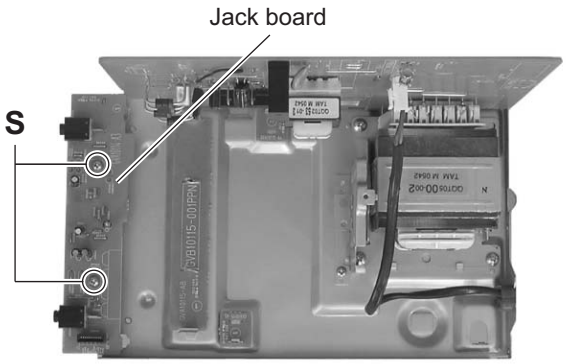

Fig.13

3.1.12 Removing the switch board (See Figs.14 and 15)

- Remove the top cover, side covers and front panel assembly.
  (1) From the front side of the front panel assembly, pull out the volume knob in the direction of the arrow. (See Fig.14.)
  (2) From the inside of the front panel assembly, remove the six screws (**T** and **T'**) attaching the switch board. (See Fig.15.)

  Reference:
  When attaching the screw **T'**, attach the earth wire with it.
  (3) Remove the switch board while releasing the claws **d** in the direction of the arrow. (See Fig.15.)

Fig.14

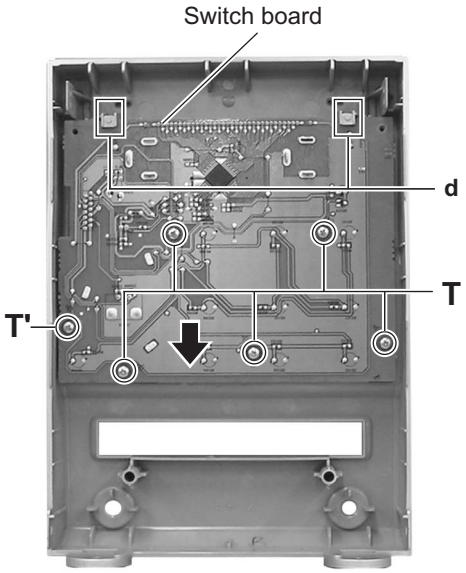

Fig.15

3.2 CD mechanism assembly

- Remove the CD mechanism assembly from main body.

3.2.1 Removing the CD cover (See Fig.1)

(1) Remove the two screws **A** attaching the CD cover from bottom side of CD mechanism assembly.
(2) Lift up the CD cover from disengage boss **a** of the CD mechanism assembly.
(3) Slide the CD cover to direction of the arrow and remove the CD cover from fixing part of **b**.
(4) Remove the CD cover.

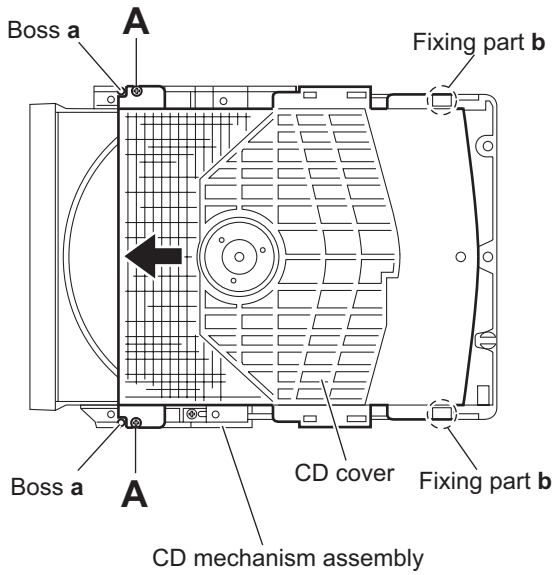

Fig.1

3.2.2 Removing the tray assembly (See Fig.2 and 3)

- Remove the CD cover.

(1) Press slide cam and pull out the tray assembly to direction of the arrow from right side of CD mechanism assembly. (See Fig.2)
(2) Remove the two screws **B** attaching the tray assembly from upper side of CD mechanism. (See Fig.3)
(3) Remove the bussing of the tray assembly from boss **c** of the CD mechanism assembly and remove the tray assembly. (See Fig.3)

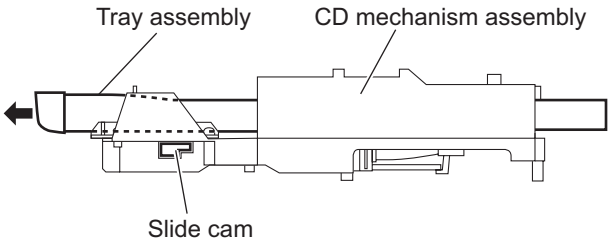

Fig.2

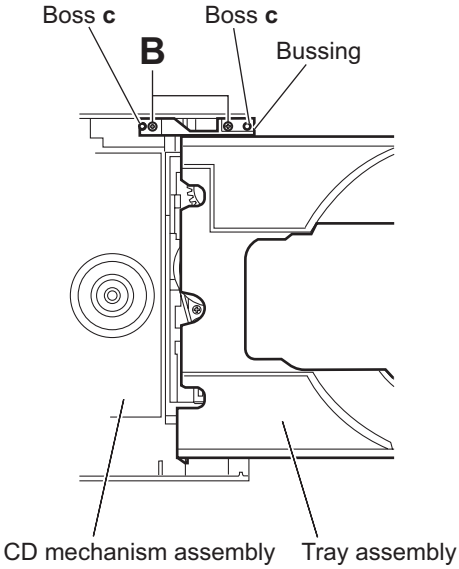

Fig.3

3.2.3 Removing the traverse mechanism assembly (See Fig.4)

(1) Remove the four screws **C** attaching the traverse mechanism assembly from bottom side of CD mechanism assembly.

(2) Disconnect the card wire from connector CN602 of the CD servo board and then take out the traverse mechanism assembly and CD servo board together.

Reference:

When reattaching the traverse mechanism assembly, the card wire should through the part **d**.

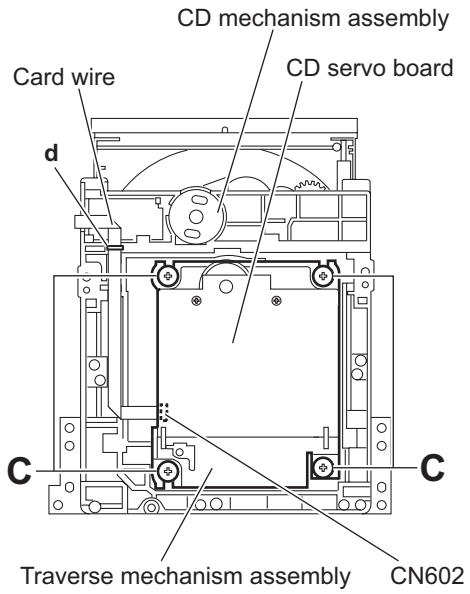

Fig.4

3.2.4 Removing the CD servo board (See Fig.5 and 6)

- Remove the traverse mechanism assembly.
  (1) Remove the two screws **D** attaching the CD servo board from bottom side of traverse mechanism assembly. (See Fig.5)
  (2) Remove the solder from solder part **e** of the CD servo board. (See Fig.5)
  (3) Remove the yellow wire from solder part **f** of the CD servo board. (See Fig.5)
  (4) Remove the white wire from solder part **h** of the CD servo board. (See Fig.5)
  (5) Remove the CD servo board to upper side, disengage the hook **c** to direction of the arrow 1 then turn over the CD servo board. (See Fig.5)
  (6) Solder to short land part **j** of pickup. (See Fig.6)
  (7) Release the lock of connector CN601 to direction of the arrow 2 and disengage the card wire. (See Fig.6)

Caution:

- Solder to short land part **j** of the pickup then disconnect the card wire from connector CN601 of the CD servo board. If disconnect the card wire before soldering, pickup is make sure destroyed by static electricity. (See Fig.6)
- When reattaching the CD servo board, connect the card wire to connector CN601 and then remove the solder of short land part **j** of the pickup.

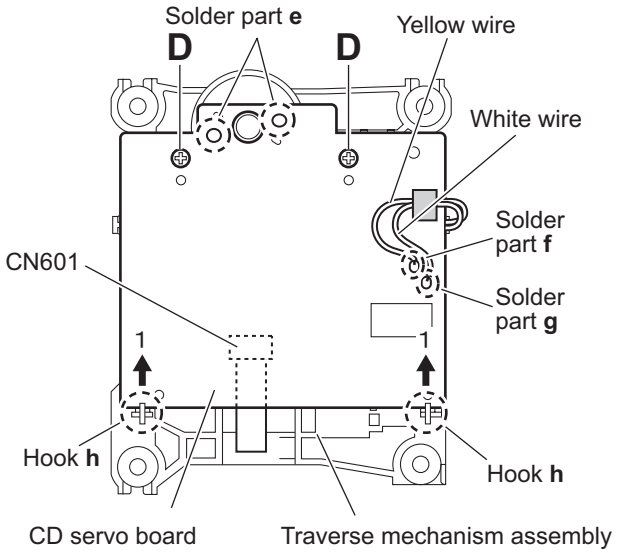

Fig.5

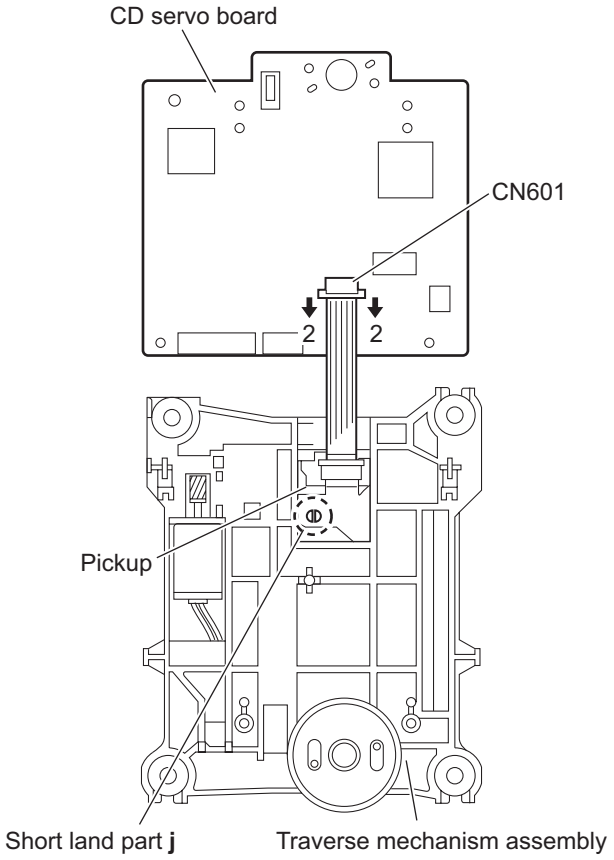

Fig.6

3.2.5 Removing the pickup (See Fig.7 to 9)

- Remove the traverse mechanism assembly.
  (1) Remove the one screw **E** attaching the plate from upper side of traverse mechanism assembly. (See Fig.7)
  (2) Remove the plate from fixing part **k** then take out the plate. (See Fig.7)
  (3) Remove the two screws **F** attaching the LEAD spring and then take out the LEAD spring. (See Fig.8)
  (4) Take out the feed gear, and then remove the shaft of pick-up from part **m** of the traverse mechanism assembly. (See Fig.8)
  (5) Remove the pickup from part **n** of the traverse mechanism assembly and then take out pickup with shaft. (See Fig.8)
  (6) Release the shaft from pickup. (See Fig.8)
  (7) Solder the short land part **p** of the pickup. (See Fig.9)
  (8) Release the lock of the connector to direction of the arrow, and then disconnect the card wire. (See Fig9)

Caution:

- Solder to short land part **p** of the pickup then disconnect the card wire from connector. If disconnect the card wire before soldering, pickup is make sure destroyed by static electricity. (See Fig.9)
- When reattaching the pickup, connect the card wire to connector and then remove the solder from short land part **p**. (See Fig.9)

3.2.6 Attaching the pickup (See Fig.7 to 10)

- Please refer the "Removing the pickup".
  (1) Connect the card wire to connector of pickup, and then remove the solder from short land part **p** of the pickup. (See Fig.9)
  (2) Attach the shaft to pickup. (See Fig.8)
  (3) Fit the pickup to part **n** of the traverse mechanism and then attach the end of the shaft to part **k**. (See Fig.8)
  (4) Attach the LEAD spring and feed gear. (See Fig.8)
  (5) Attach the plate. (See Fig. 7)
  (6) One turn the LEAD gear to direction of the arrow 1 and fully shift to direction of the arrow 2. (See Fig.10)

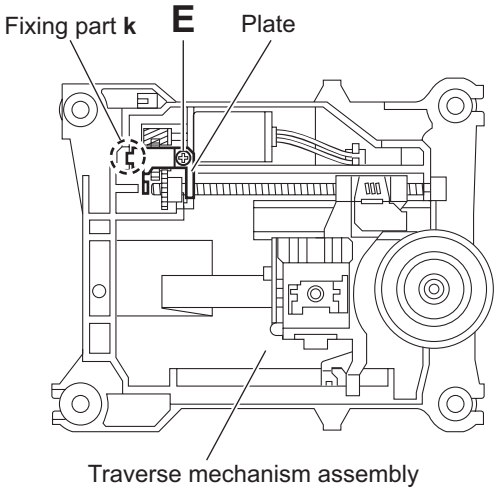

Fig.7

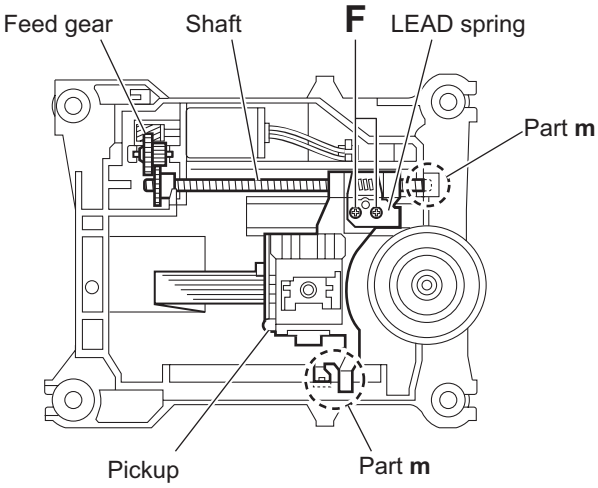

Fig.8

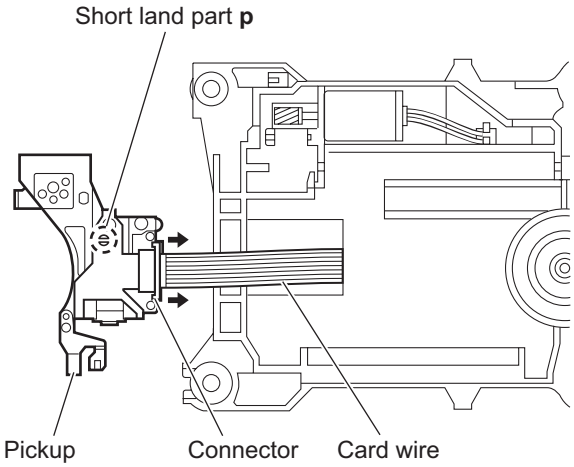

Fig.9

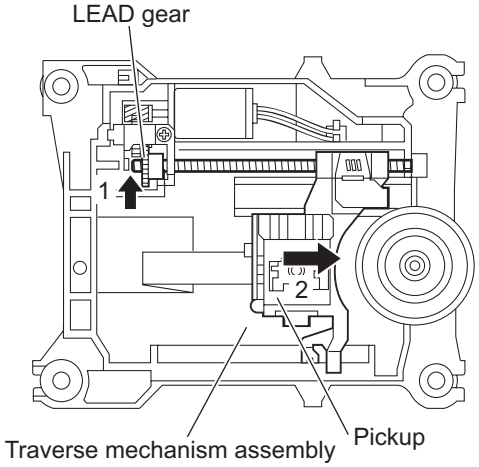

Fig.10

3.2.7 Removing the feed motor (See Fig.11 to 13)

- Remove the traverse mechanism.
  (1) Remove the yellow wire from solder part **q** of the CD servo board from upper side of traverse mechanism. (See Fig.11)
  (2) Remove the white wire from solder part **r** of the CD servo board. (See Fig.11)
  (3) Remove the one screw **G** attaching the plate. (See Fig.12)
  (4) Disengage the plate from fixing part s and take out the plate. (See Fig.12)
  (5) Remove the feed gear and take out the feed motor. (See Fig13)

Reference:

When attaching the feed motor, the wire has to through the part **t** of the traverse mechanism assembly. (See Fig.13)

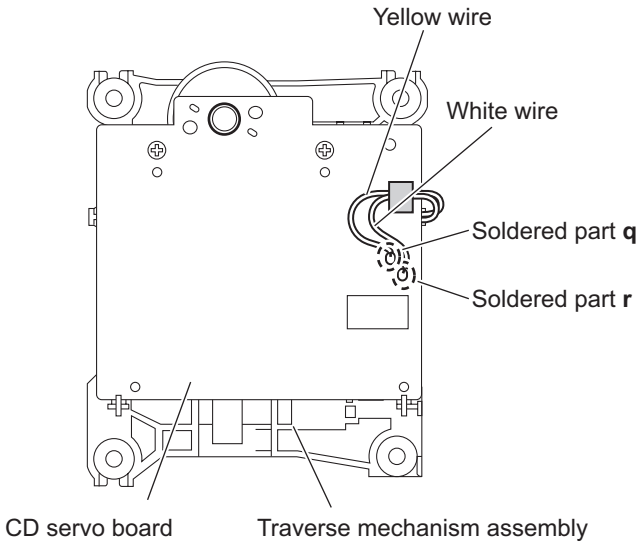

Fig.11

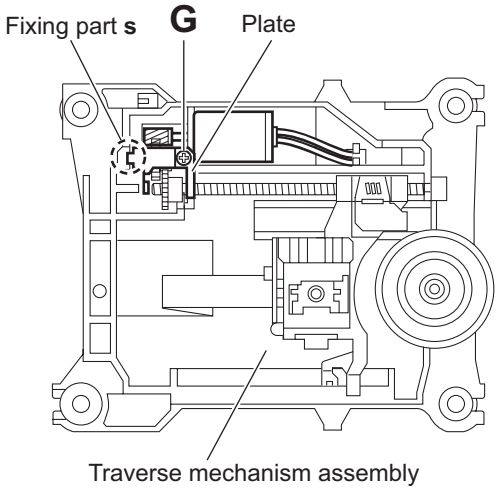

Fig.12

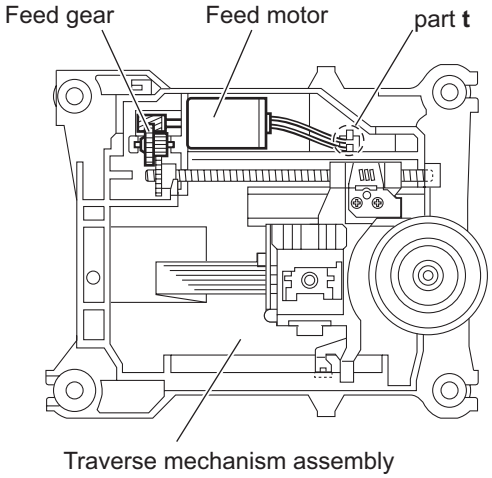

Fig.13

3.2.8 Removing the switch board (See Fig.14)

(1) Disconnect the card wire from CN1 of the switch board from bottom side of CD mechanism assembly.
(2) Remove the wire from solder part **u** of the switch board.
(3) Remove the one screw **H** attaching the switch board to CD mechanism assembly.
(4) Lift up the switch board by pushing the hook **v** of CD mechanism assembly and take out it from part **w**.

Reference:

- After attach the switch board to CD mechanism assembly, wire hooked to part **x**.
- Hook **u** of the CD mechanism assembly, it have to bond lock.

3.2.9 Removing the motor (See Fig.14 and 15)

- Remove the tray assembly.

(1) Remove the wire from solder part u of the switch board from bottom side of CD mechanism assembly.
(2) Remove the belt of motor pulley from upper side of CD mechanism assembly. (See Fig.15)

Caution:
Belt should not apply grease.

(3) Remove the two screws **J** attaching the motor to CD mechanism assembly and take out the motor from bottom side of CD mechanism assembly. (See Fig.15)

Reference:
After motor attached to CD mechanism assembly, wire should hook to part **w**. (See Fog.14)

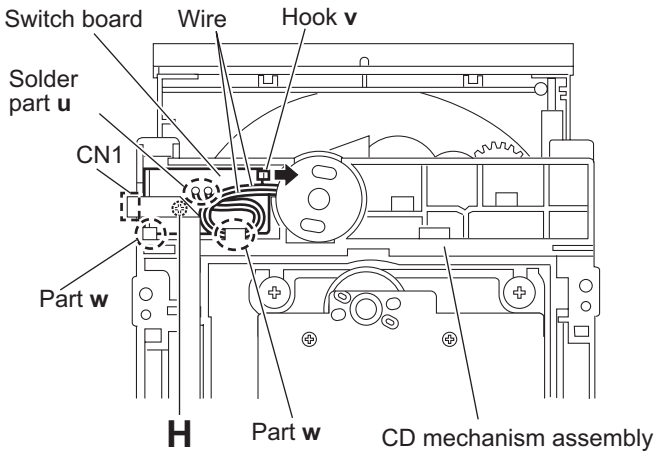

Fig.14

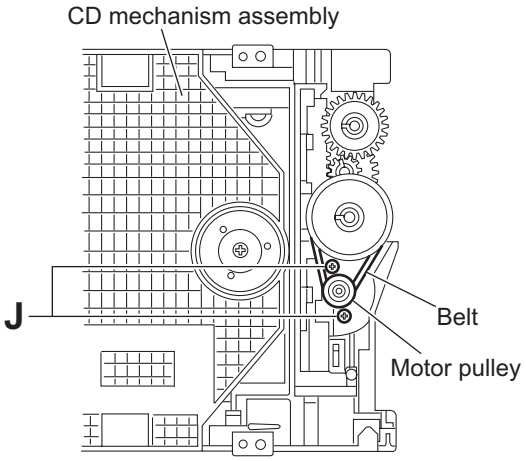

Fig.15

SECTION 4
ADJUSTMENT

4.1 Test mode

Step	Special key function	Keys	Description
1	Cold start	(remocon) A.STANDBY + SET + DISPLAY	1. Restore factory setting at next AC Power ON. Volume level: 12 First source at Power ON: CD Sound Turbo: Enable AHB Pro: Disable FM Preset Channel: restore to factory setting Clock/ Timer: Clear Dimmer: restore to factory setting 2. FL display: COLD during key pressed.
2	Clock fast forward	(remocon) A.STANDBY + SET + FM MODE/ PLAY MODE	1. Clock minute fast increase by 1 every seconds. (Clock starts from 0:00 if not preset) 2. Pressed again to stop clock fast running. 3. During: Power Standby: OK Power ON: OK ECO mode: OK Safety trigger: OK
3	Volume change	(remocon) A.STANDBY + SET + SOUND TURBO	1. Volume level changes from 40 > 21 > Vol MIN > 40 2. During: Power Standby: OK (unit will turn ON) Power ON: OK ECO mode: OK Safety trigger: OK
4	Version display	(remocon) A.STANDBY + SET + AHB PRO	1. Display ROM version for 5 seconds. 2. Example: 37R06107 Digit 1 and 2: ROM version = 37 Digit 3 and 4: ROM Correction version = 0 Digit 5: ROM issue year = 2006 Digit 6: ROM issue month = January (1: Jan, 2: Feb, 3: Mar, 4: Apr, 5: May, 6: June, 7: July, 8: Aug, 9: Sept, A: Oct, B: Nov, C: Dec) Digit 7 and 8: ROM issue day = 7 3. During: Power Standby: NG Power ON: OK ECO mode: NG Safety trigger: NG
5	FL display test	(remocon) A.STANDBY + SET + BASS/TREBLE	1. All FL segments will blink at 500ms interval. 2. During: Power Standby: OK Power ON: OK ECO mode (Pressing DIMMER key at Power Standby): NG Safety trigger: NG 3. Press any key (except SOUND TURBO) on the unit or CANCEL key (remocon) will exit test mode."
6	Safety info display	(Unit) SOUND TURBO + STOP	1. Safety Information display. During safety trigger, safety info is display for 2 sec and return to ECO mode. 2. Safety Information display: NO SAFTY: No Safety triggered. SFTY- VH: Power IC NG SFTY-REG: Power Regulator NG SFTY-ALP: tape module NG SFTY- CD: CD module NG SFTY-PRT: Power AMP Protector NG 3. During: Power Standby: OK Power ON: NG ECO mode: OK (FL turns ON for 2sec then turns OFF) Safety trigger: OK (FL turns ON for 2sec then turns OFF) 4. For version 36, there is no backup of safety information. It shows only current safety condition. 5. For version 37, last safety information is backup.

SECTION 5
TROUBLE SHOOTING

5.1 Maintenance of laser pickup (CD)

(1) Cleaning the pick up lens
Before you replace the pick up, please try to clean the lens with a alcohol soaked cotton swab.

(2) Life of the laser diode
When the life of the laser diode has expired, the following symptoms will appear.
- The level of RF output (EFM output : ampli tude of eye pattern) will below.

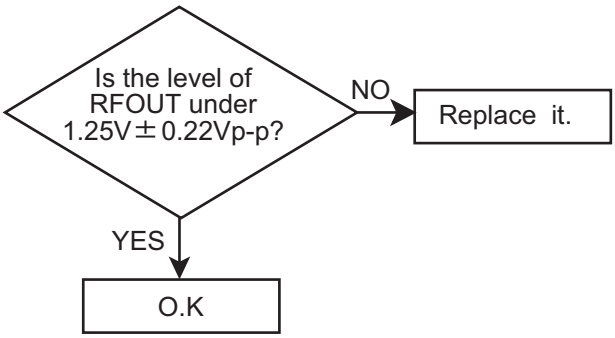

(3) Semi-fixed resistor on the APC PC board
The semi-fixed resistor on the APC printed circuit board which is attached to the pickup is used to adjust the laser power. Since this adjustment should be performed to match the characteristics of the whole optical block, do not touch the semi-fixed resistor.
If the laser power is lower than the specified value, the laser diode is almost worn out, and the laser pickup should be replaced.
If the semi-fixed resistor is adjusted while the pickup is functioning normally, the laser pickup may be damaged due to excessive current.

5.2 Replacement of laser pickup (CD)

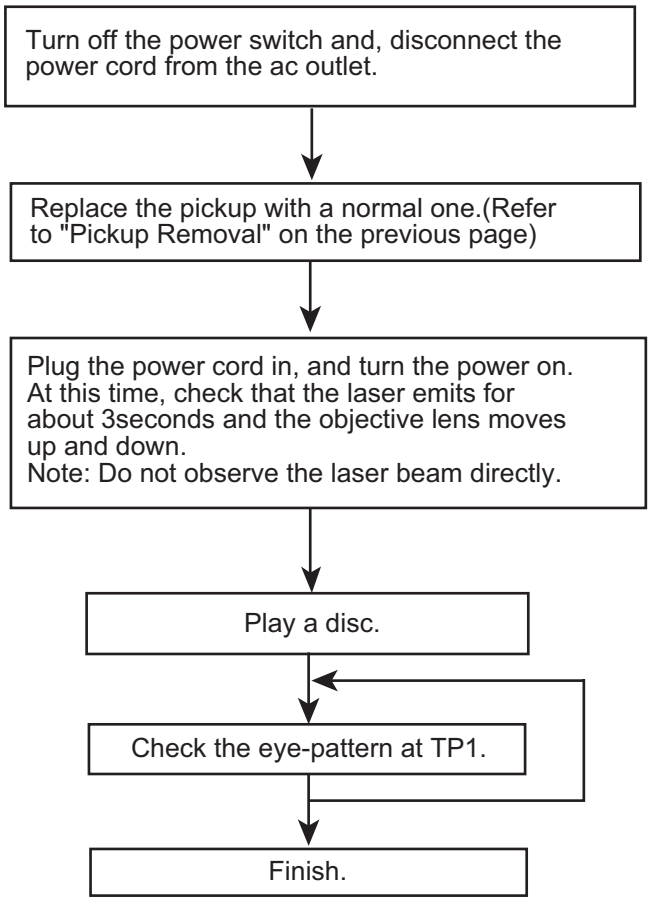

Victor Company of Japan, Limited
Audio/Video Systems Category 10-1,1chome,Ohwatari-machi,Maebashi-city,371-8543,Japan

(No.MB522)

Printed in Japan
VPT

JVC

SCHEMATIC DIAGRAMS

MICRO COMPONENT SYSTEM

UX-G33B,UX-G33E,UX-G33EN UX-G33EV,UX-G30B,UX-G30E UX-G30EN,UX-G30EV

CD-ROM No.SML200604

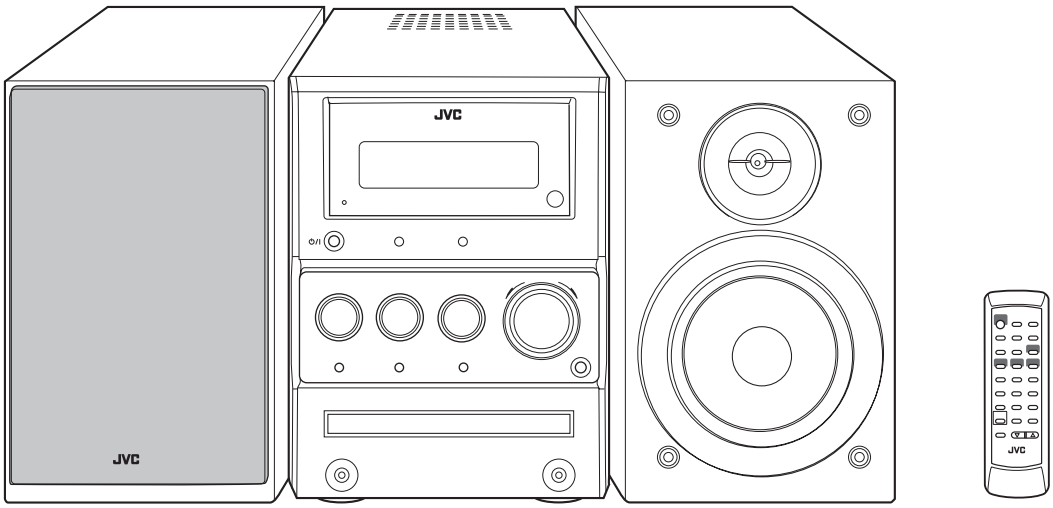

COMPACT disc DIGITAL AUDIO

MP3 PLAYBACK

Radio Data System

Lead free solder used in the board (material : Sn-Ag-Cu, melting point : 219 Centigrade)

Contents

Block diagrams ---------- 2-1
Standard schematic diagrams ---------- 2-2
Printed circuit boards ---------- 2-7 to 9

COPYRIGHT ⓒ2006 Victor Company of Japan, Limited.

No.MB522SCH
2006/4

In regard with component parts appearing on the silk-screen printed side (parts side) of the PWB diagrams, the parts that are printed over with black such as the resistor (▬), diode (▮) and ICP (●) or identified by the "⚠" mark nearby are critical for safety.

Block diagram

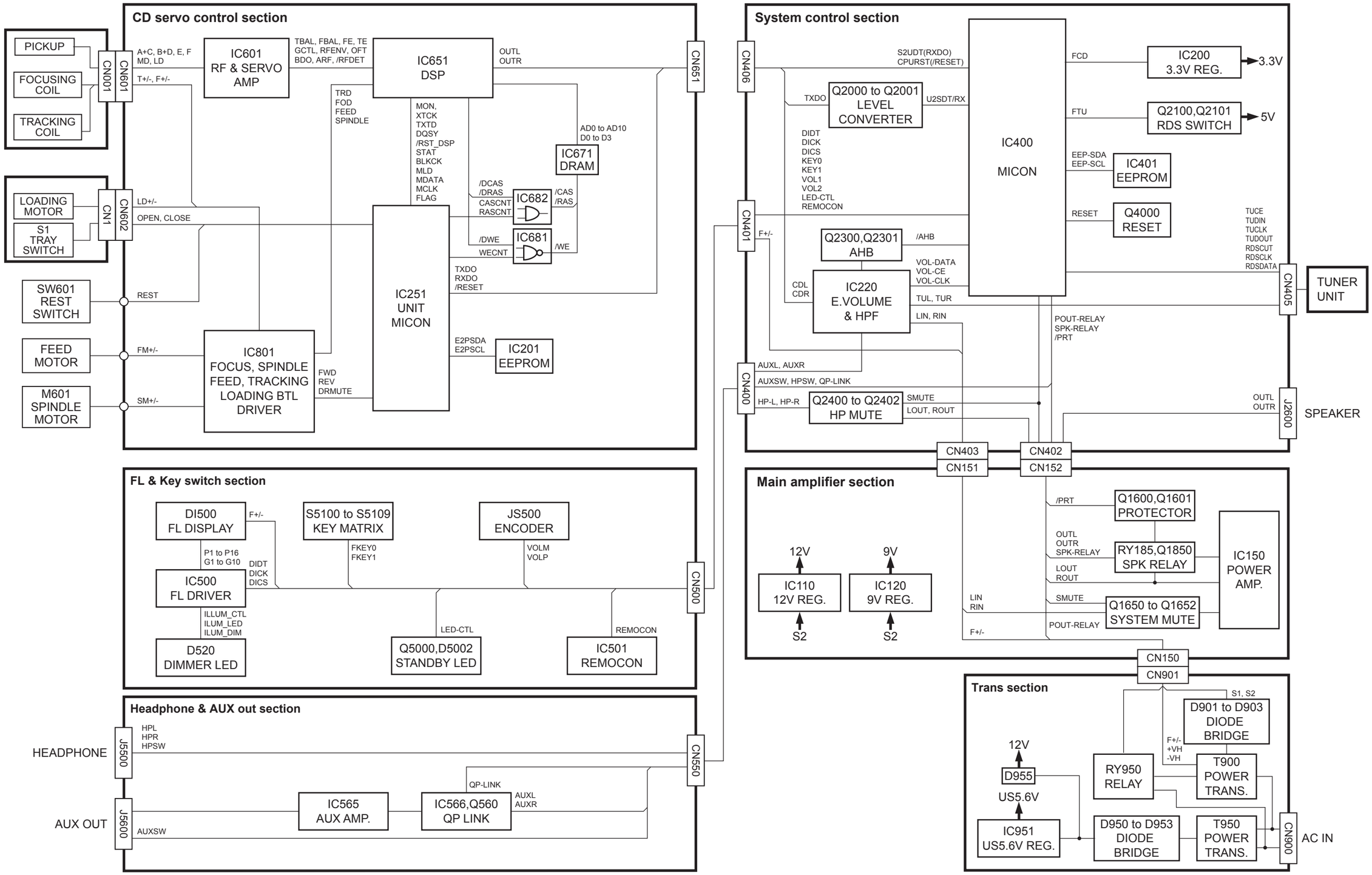

Standard schematic diagrams

■ Trans section

PAGE	
1	TRANSFORMER BOARD
2	AMP BOARD
3	MICON BOARD
4	FRONT BOARD
5	ALPS
6	CD BOARD

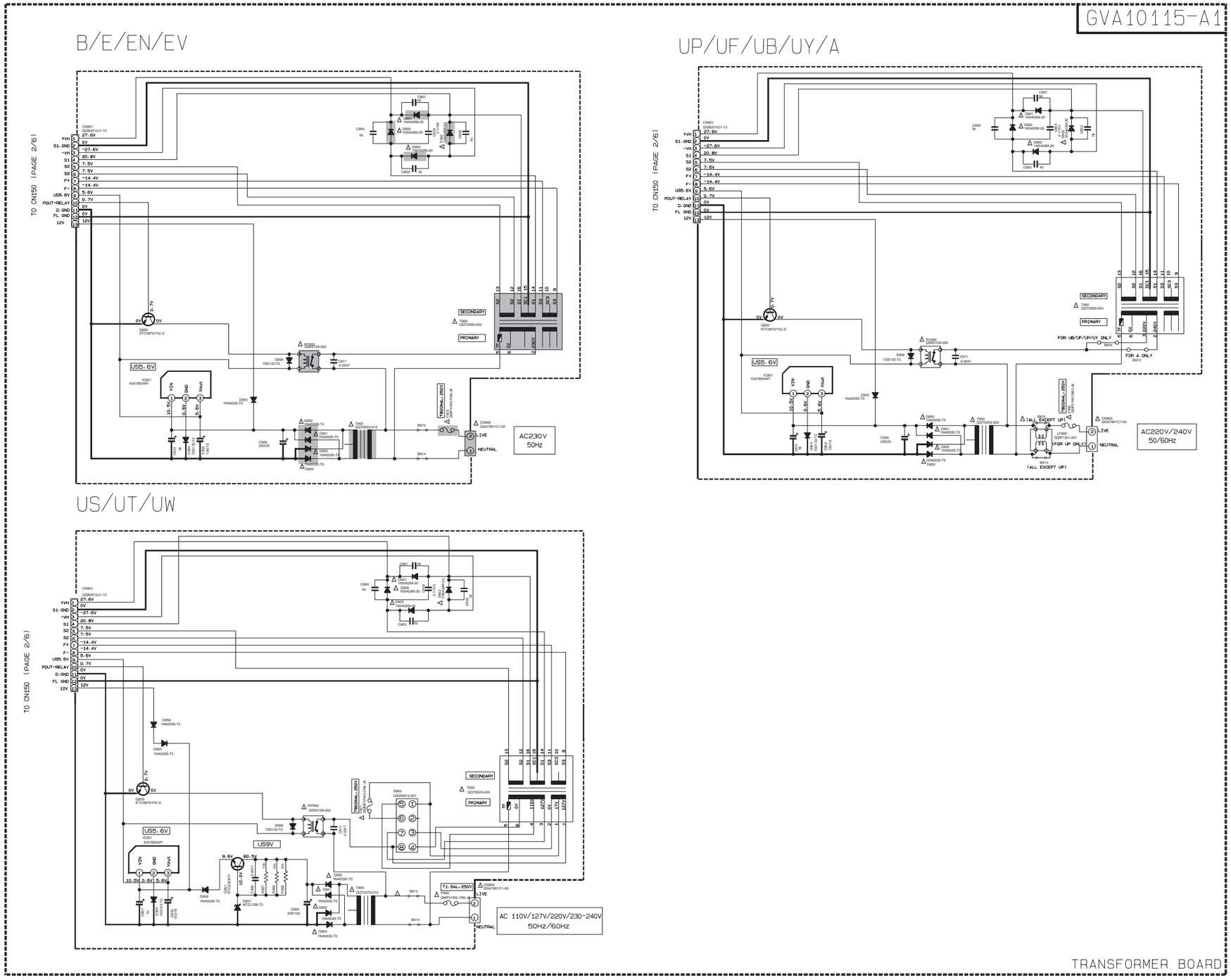

OL EXT	VERSION CODES
002	B :U.K.
005	E :CONTINENTAL EUROPE
009	EN :NORDIC COUNTRIES
026	EV :EASTERN EUROPE
003	A :AUSTRALIA
023	UF :CHINA
019	UB :HONG KONG
014	US :SINGAPORE
010	UT :TAIWAN
037	UW :SOUTH AMERICA
025	UY :ARGENTINA
022	UP :KOREA

NOTES

1. VOLTAGES ARE DC-MEASURED WITH A DIGITAL VOLT METER OR OSCILLOSCOPE WITHOUT INPUT SIGNAL. CONDITION —— CD STOP MODE
2. UNLESS OTHERWISE SPECIFIED.
   ALL RESISTORS ARE 1/4W ± 5% CARBON FILM RESISTOR OR 0.063W ±5% THICK FILM CHIP RESISTOR
   ALL CAPACITORS ARE CERAMIC CAPACITOR OR MYLAR CAPACITOR.
   ALL RESISTANCE VALUES ARE IN OHM(Ω).
   ALL CAPACITANCE VALUES ARE IN μF(P=pF).
   ALL E-CAPACITORS ARE SHOWN IN THE FORM OF CAPACITANCE(μF)/RATED VOLTAGE (V).
   ALL INDUCTANCE VALUES ARE IN μH(m=mH).
3. NI= NO INSERT

VOLTAGE SELECTOR LOCATION

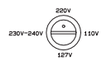

VOLT SEL POSITIONS

⚠ Parts are safety assurance parts. When replacing those parts make sure to use the specified one.

■ Amplifier section

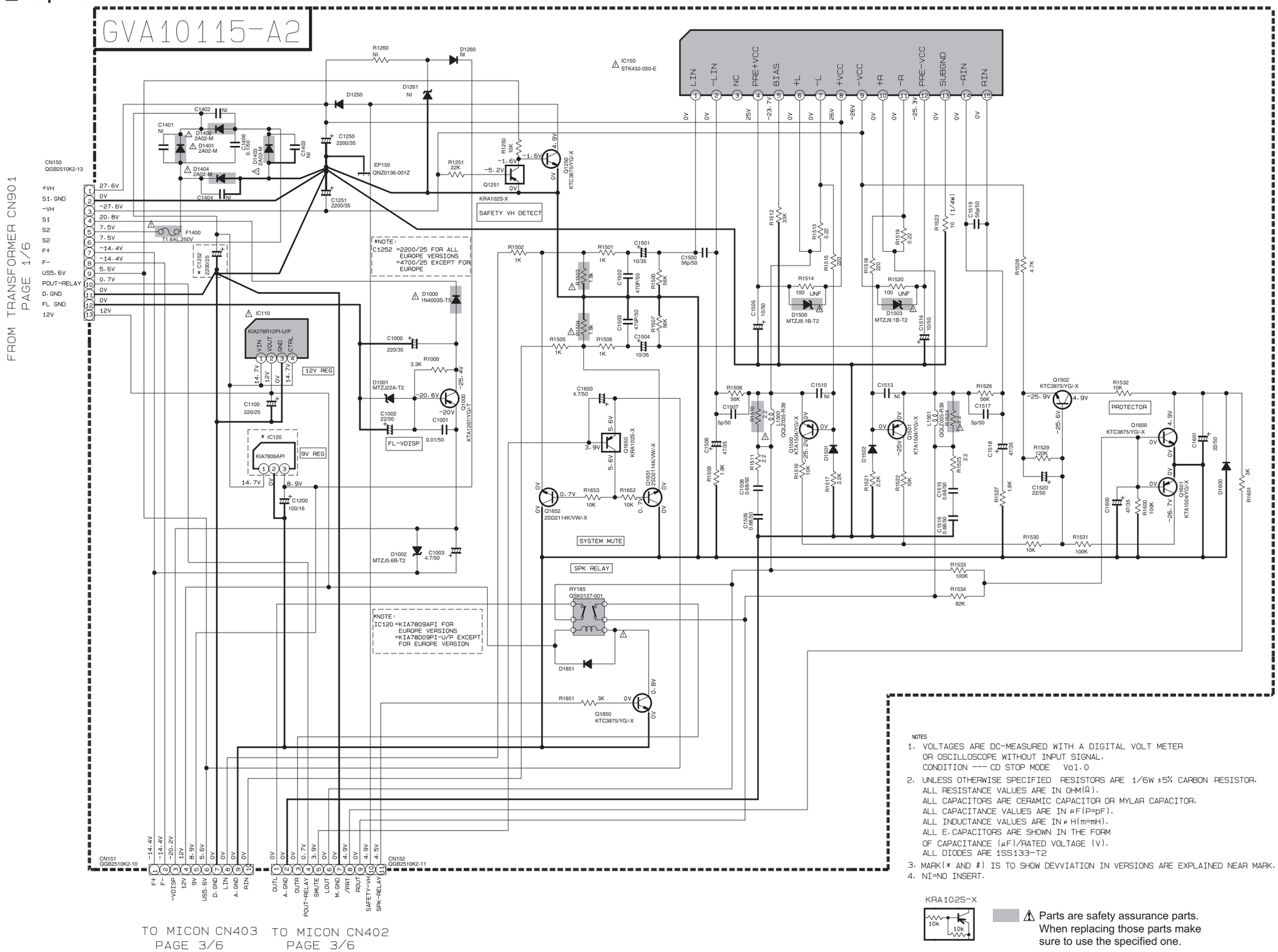

NOTES

1. VOLTAGES ARE DC-MEASURED WITH A DIGITAL VOLT METER OR OSCILLOSCOPE WITHOUT INPUT SIGNAL.
   CONDITION --- CD STOP MODE Vol.0
2. UNLESS OTHERWISE SPECIFIED RESISTORS ARE 1/6W ±5% CARBON RESISTOR.
   ALL RESISTANCE VALUES ARE IN OHM(Ω).
   ALL CAPACITORS ARE CERAMIC CAPACITOR OR MYLAR CAPACITOR.
   ALL CAPACITANCE VALUES ARE IN μF(P=pF).
   ALL INDUCTANCE VALUES ARE IN μH(m=mH).
   ALL E.CAPACITORS ARE SHOWN IN THE FORM OF CAPACITANCE (μF)/RATED VOLTAGE (V).
   ALL DIODES ARE 1SS133-T2
3. MARK(* AND #) IS TO SHOW DEVVIATION IN VERSIONS ARE EXPLAINED NEAR MARK.
4. NI=NO INSERT.

KRA102S-X

⚠ Parts are safety assurance parts. When replacing those parts make sure to use the specified one.

■ Micon section

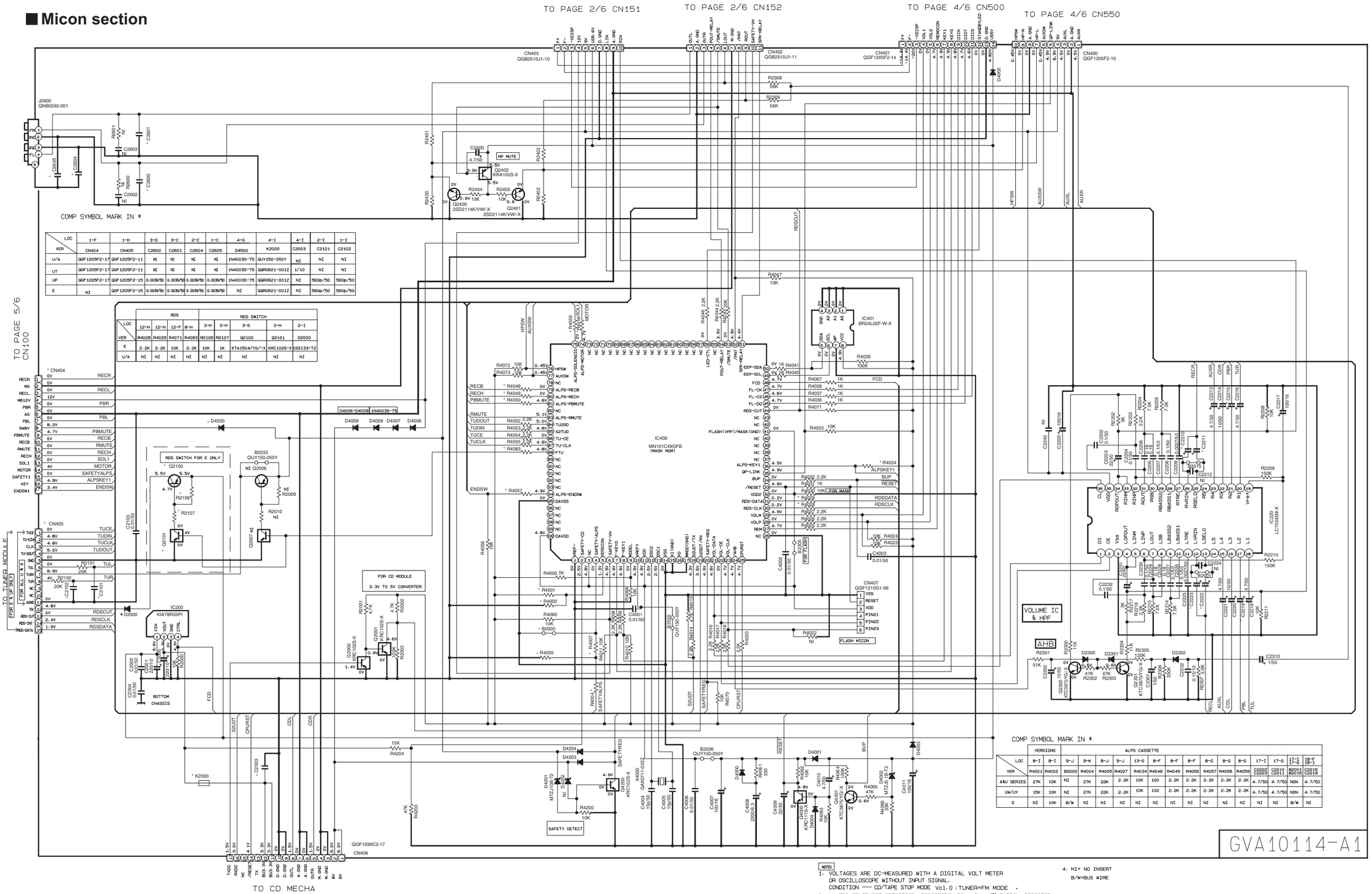

LOC / VER	1-F	1-H	3-D	3-C	2-C	1-C	4-G	4-I	4-I	2-I	1-I
	CN404	CN405	C2600	C2601	C2604	C2605	D4500	K2000	C2003	C2101	C2102
U/A	QGF1205F2-17	QGF1205F2-11	NI	NI	NI	NI	1N4003S-T5	QUY150-050Y	NI	NI	NI
UT	QGF1205F2-17	QGF1205F2-11	NI	NI	NI	NI	1N4003S-T5	QGR0621-001Z	1/10	NI	NI
UP	QGF1205F2-17	QGF1205F2-15	0.039/50	0.039/50	0.039/50	0.039/50	1N4003S-T5	QGR0621-001Z	NI	560p/50	560p/50
E	NI	QGF1205F2-15	0.039/50	0.039/50	0.039/50	0.039/50	NI	QGR0621-001Z	NI	560p/50	560p/50

LOC / VER	RDS				RDS SWITCH				
	12-H	12-H	12-F	8-H	3-H	3-H	3-G	3-H	2-I
	R4028	R4029	R4071	R4083	R2105	R2107	Q2100	Q2101	D2000
E	2.2K	2.2K	10K	2.2K	10K	1K	KTA1504/YG/-X	KRC102S-X	1SS133-T2
U/A	NI	NI	NI	NI	NI	NI	NI	NI	NI

	VERSIONS		ALPS CASSETTE													
LOC	8-I	8-I	9-J	9-K	8-J	9-J	13-G	8-F	8-F	8-F	8-G	8-G	8-G	17-I	17-G	17-I / 17-G	18-F / 18-I
VER	R4001	R4002	B2000	R4004	R4005	R4007	R4034	R4048	R4049	R4050	R4057	R4058	R4059	C2222 / C2223	C2210 / C2211	B2001 / B2015	C2215 / C2219
A&U SERIES	27K	10K	NI	27K	22K	2.2K	10K	100	2.2K	2.2K	2.2K	2.2K	2.2K	4.7/50	4.7/50	NON	4.7/50
UK/LY	15K	10K	NI	27K	22K	2.2K	10K	100	2.2K	2.2K	2.2K	2.2K	2.2K	4.7/50	4.7/50	NON	4.7/50
E	NI	10K	B/W	NI	NI	NI	NI	NI	NI	NI	NI	NI	NI	NI	NI	B/W	NI

PINS / LOC	1	2	3	4	5	6	7	8	9	10	11	12	13	14	15	16	17	18	19	20	21	22	23	24	25	26	27	28	29	30	31	32	33	34	35	36
IC220	4.8V	0V	0V	4.4V	4.4V	4.4V	4.4V	4.4V	4.4V	4.4V	4.4V	4.4V	4.4V	4.4V	4.4V	4.4V	4.4V	4.4V	4.4V	4.4V	4.4V	4.4V	4.4V	4.4V	4.4V	4.4V	4.4V	4.4V	4.4V	4.4V	4.4V	4.4V	4.4V	4.4V	8.9V	4.7V
CN402	0V	0V	0V	0.77	3.9	0V	0V	4.9V	0V	4.9V	4.45V																									
CN403	-14.4V	-14.4V	-20V	12V	8.9V	5.6V	0V	0V	0V	0V																										

NOTES

1. VOLTAGES ARE DC-MEASURED WITH A DIGITAL VOLT METER OR OSCILLOSCOPE WITHOUT INPUT SIGNAL.
   CONDITION ---- CD/TAPE STOP MODE Vol.0 :TUNER=FM MODE .
2. UNLESS OTHERWISE SPECIFIED RESISTORS ARE 1/8W ±5% CARBON RESISTOR.
   ALL RESISTANCE VALUES ARE IN OHM(Ω).
   ALL CAPACITORS ARE CERAMIC CAPACITOR OR MYLAR CAPACITOR.
   ALL CAPACITANCE VALUES ARE IN #F(P=pF).
   ALL INDUCTANCE VALUES ARE IN # H(m=mH).
   ALL E-CAPACITORS ARE SHOWN IN THE FORM OF CAPACITANCE (μF)/RATED VOLTAGE (V).
   ALL DIODES ARE 1SS133-T2
3. MARK(* AND #) IS TO SHOW DEVVIATION IN VERSIONS ARE EXPLAINED NEAR MARK.
4. NI= NO INSERT
   B/W=BUS WIRE

■ Front section

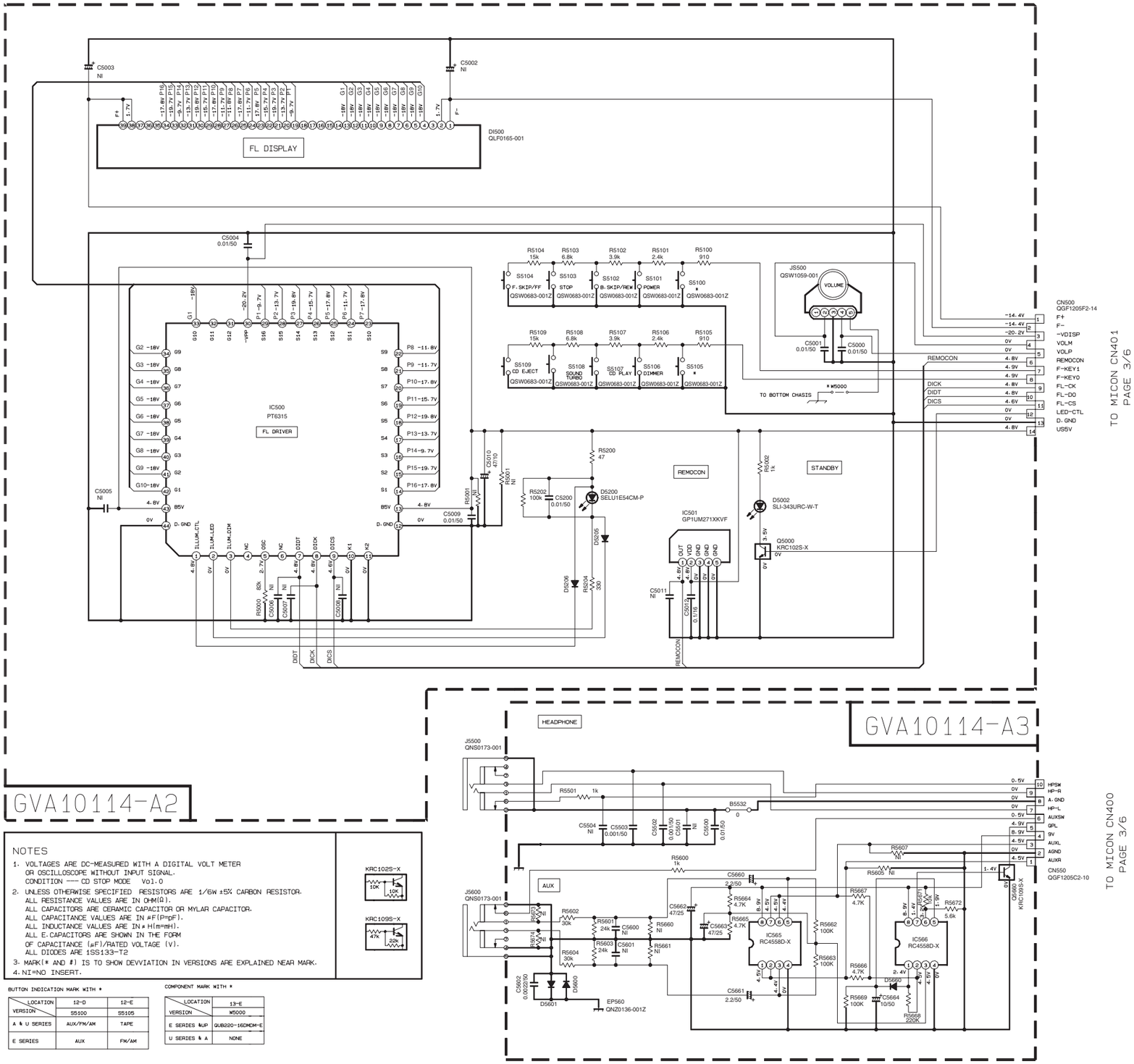

■ Loader section

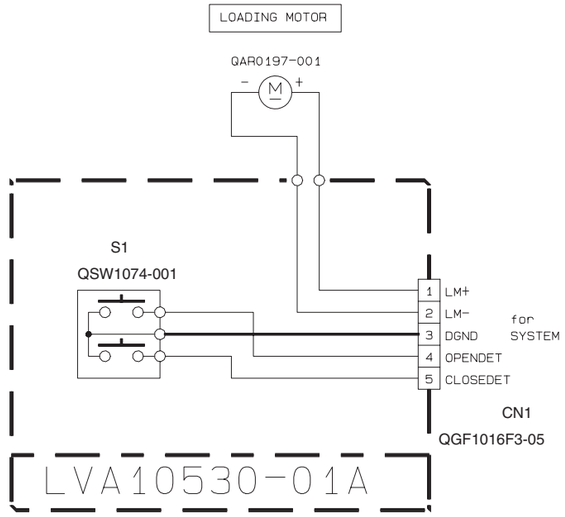

NOTES

1. VOLTAGES ARE DC-MEASURED WITH A DIGITAL VOLT METER OR OSCILLOSCOPE WITHOUT INPUT SIGNAL. CONDITION --- CD STOP MODE Vol.0
2. UNLESS OTHERWISE SPECIFIED RESISTORS ARE 1/6W ±5% CARBON RESISTOR. ALL RESISTANCE VALUES ARE IN OHM(Ω). ALL CAPACITORS ARE CERAMIC CAPACITOR OR MYLAR CAPACITOR. ALL CAPACITANCE VALUES ARE IN #F(P=pF). ALL INDUCTANCE VALUES ARE IN #H(m=mH). ALL E.CAPACITORS ARE SHOWN IN THE FORM OF CAPACITANCE (μF)/RATED VOLTAGE (V). ALL DIODES ARE 1SS133-T2
3. MARK(* AND #) IS TO SHOW DEVVIATION IN VERSIONS ARE EXPLAINED NEAR MARK.
4. NI=NO INSERT.

KRC102S-X

KRC109S-X

BUTTON INDICATION MARK WITH *

LOCATION / VERSION	12-D	12-E
	S5100	S5105
A & U SERIES	AUX/FM/AM	TAPE
E SERIES	AUX	FM/AM

COMPONENT MARK WITH *

LOCATION / VERSION	13-E
E SERIES &UP	W5000
U SERIES & A	NONE

■CD section

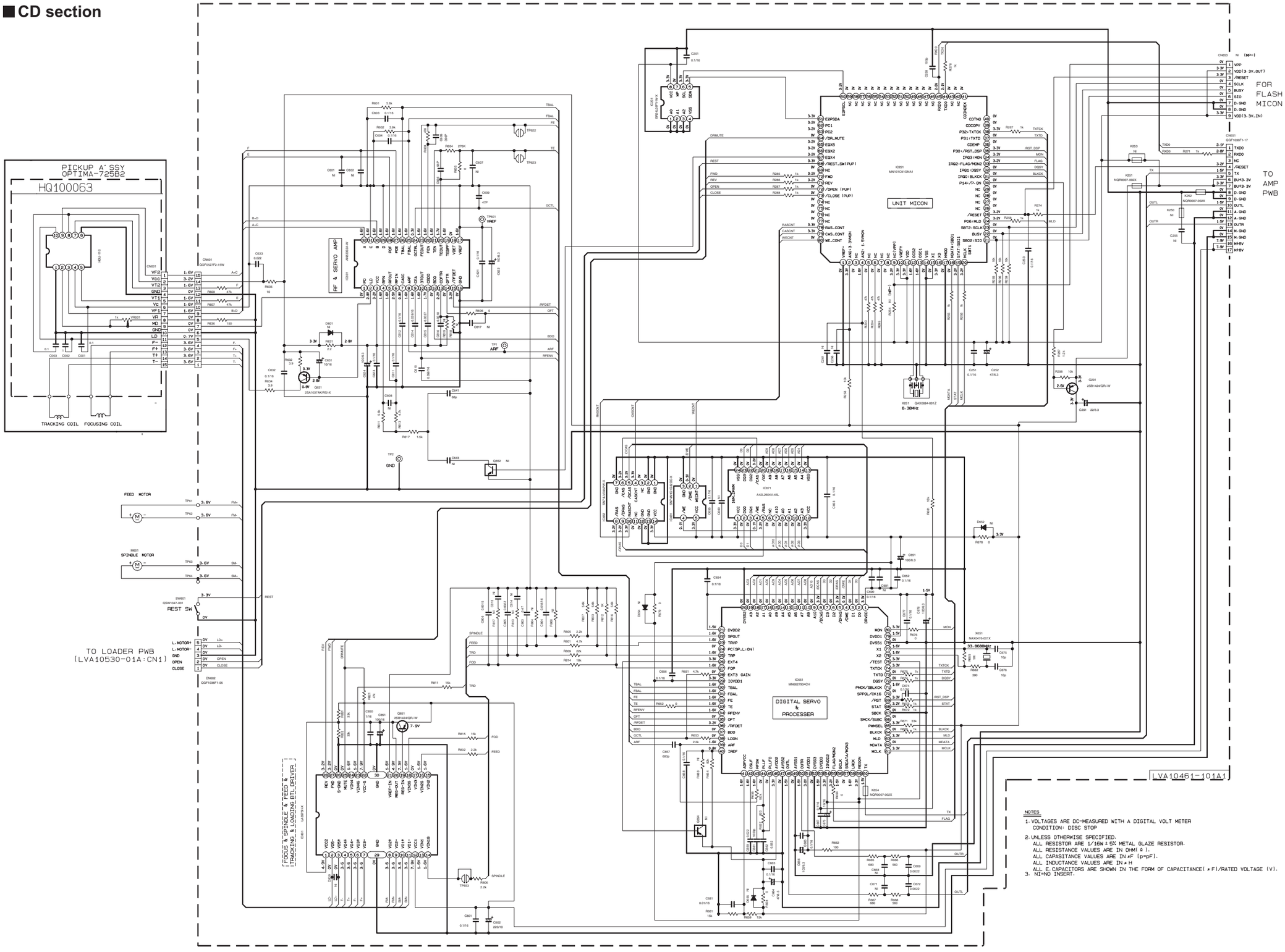

NOTES

1. VOLTAGES ARE DC-MEASURED WITH A DIGITAL VOLT METER
   CONDITION: DISC STOP
2. UNLESS OTHERWISE SPECIFIED.
   ALL RESISTOR ARE 1/16W ± 5% METAL GLAZE RESISTOR.
   ALL RESISTANCE VALUES ARE IN OHM(Ω).
   ALL CAPASITANCE VALUES ARE IN μF (p=pF).
   ALL INDUCTANCE VALUES ARE IN μH
   ALL E.CAPACITORS ARE SHOWN IN THE FORM OF CAPACITANCE(μF)/RATED VOLTAGE (V).
3. NI=NO INSERT.

Printed circuit boards

■ Trans board

Lead free solder used in the board (material : Sn-Ag-Cu, melting point : 219 Centigrade)

(Power supply board)

(Power amplifier board)

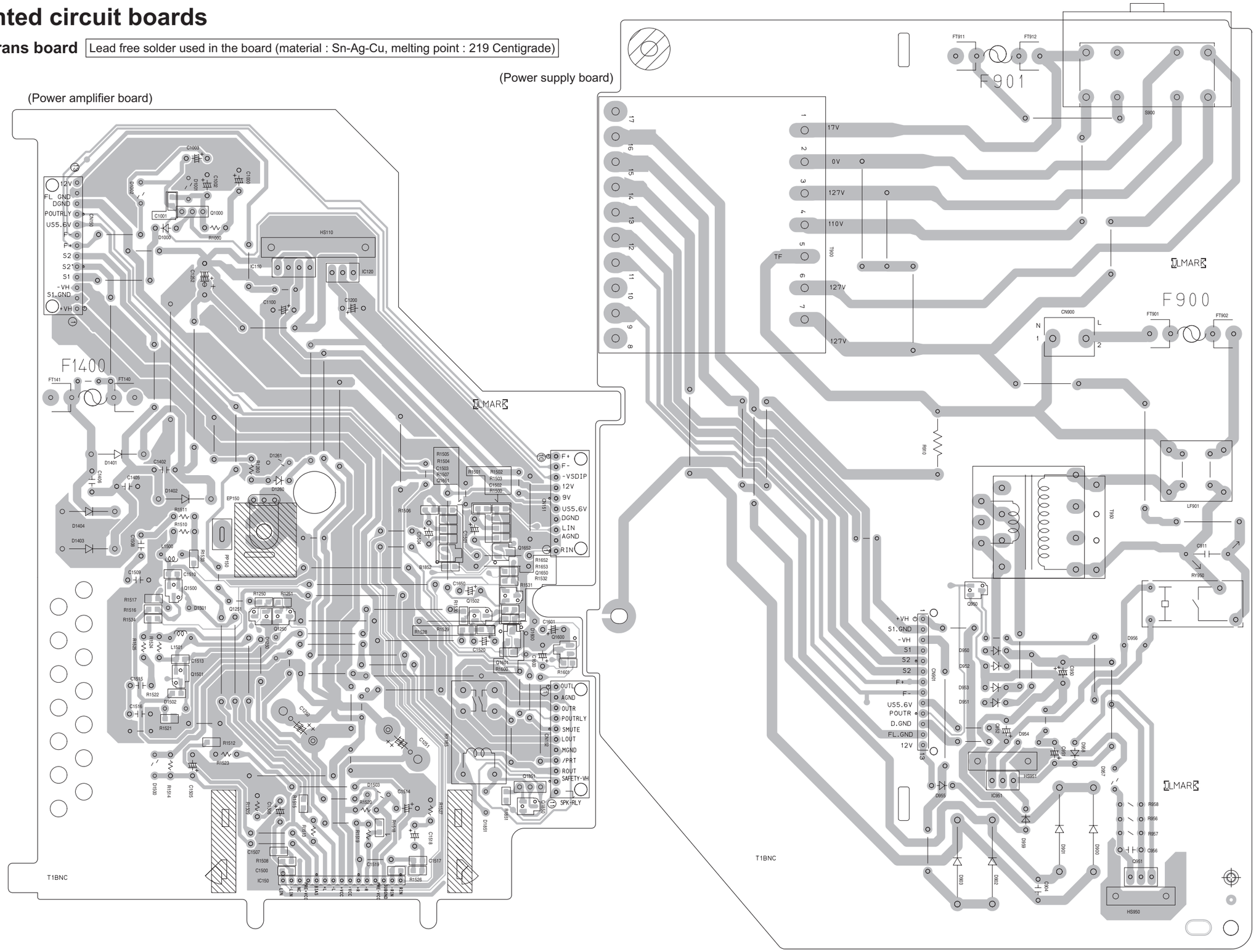

■ Main board

Lead free solder used in the board (material : Sn-Ag-Cu, melting point : 219 Centigrade)

(Main board)

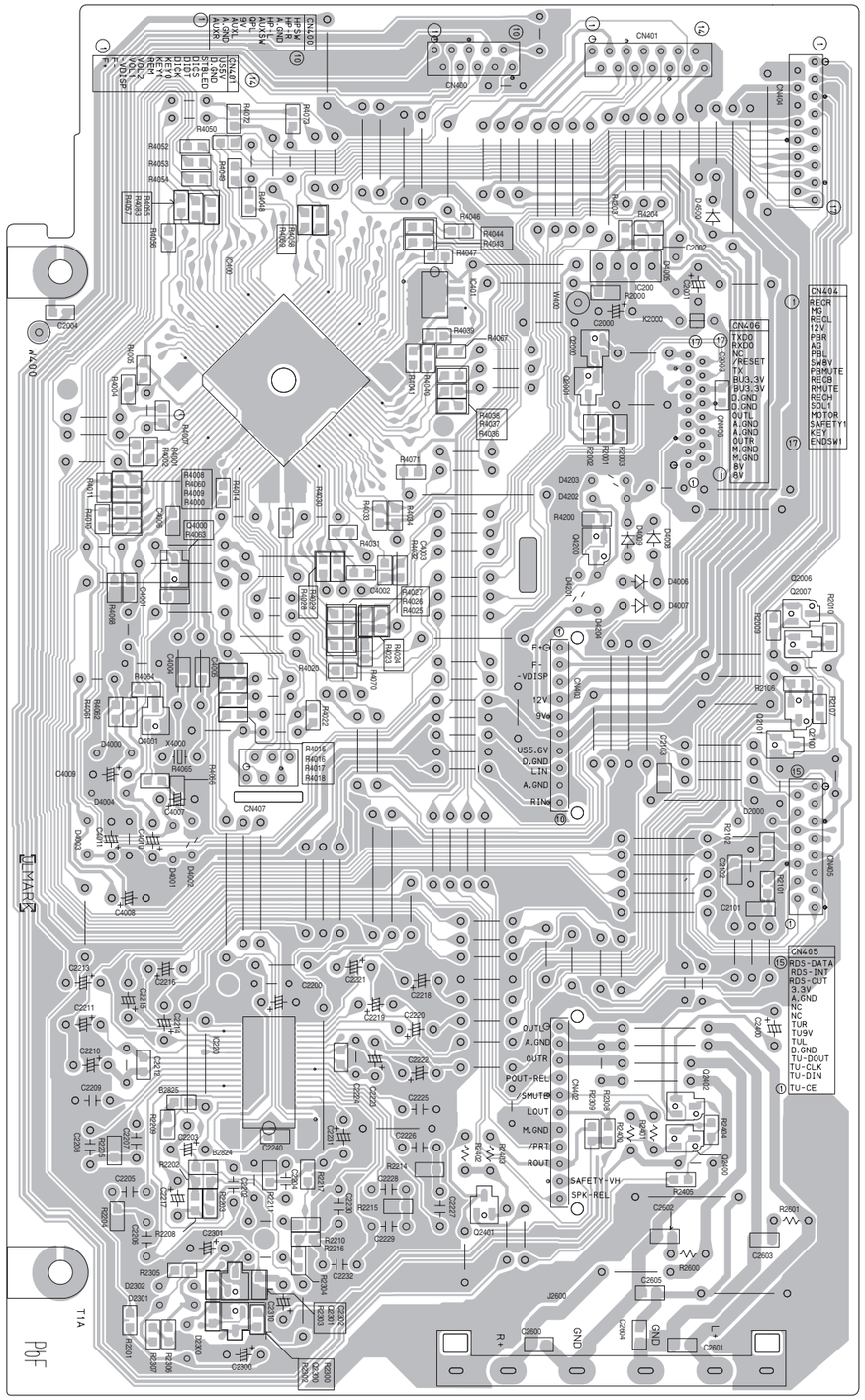

(Switch board)

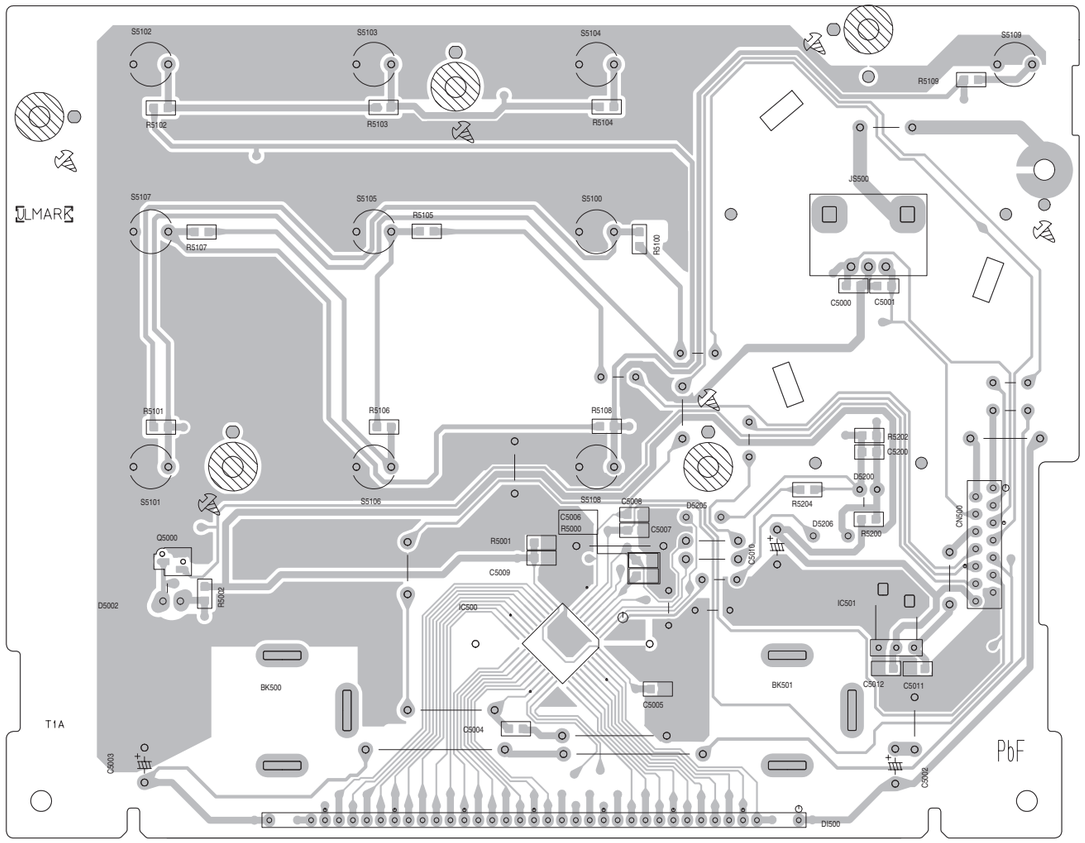

(Jack board)

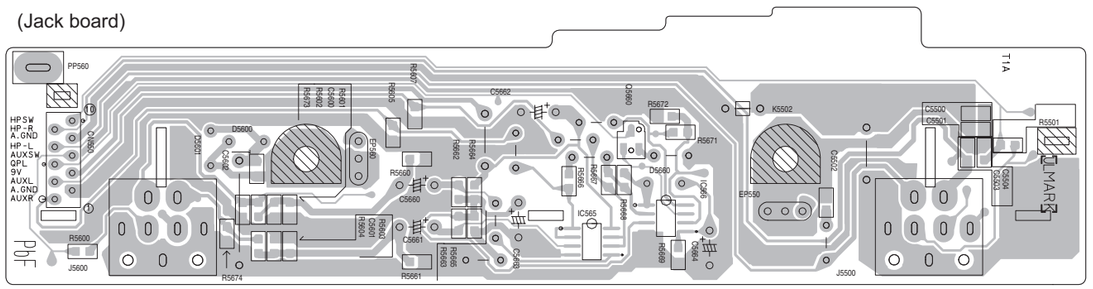

■ CD board

Lead free solder used in the board (material : Sn-Ag-Cu, melting point : 219 Centigrade)

forward side

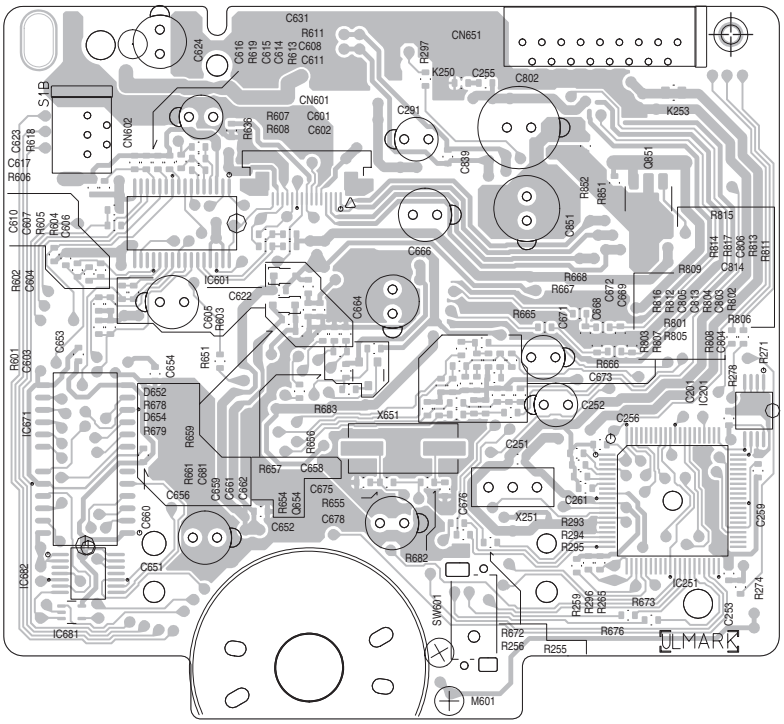

Reverse side

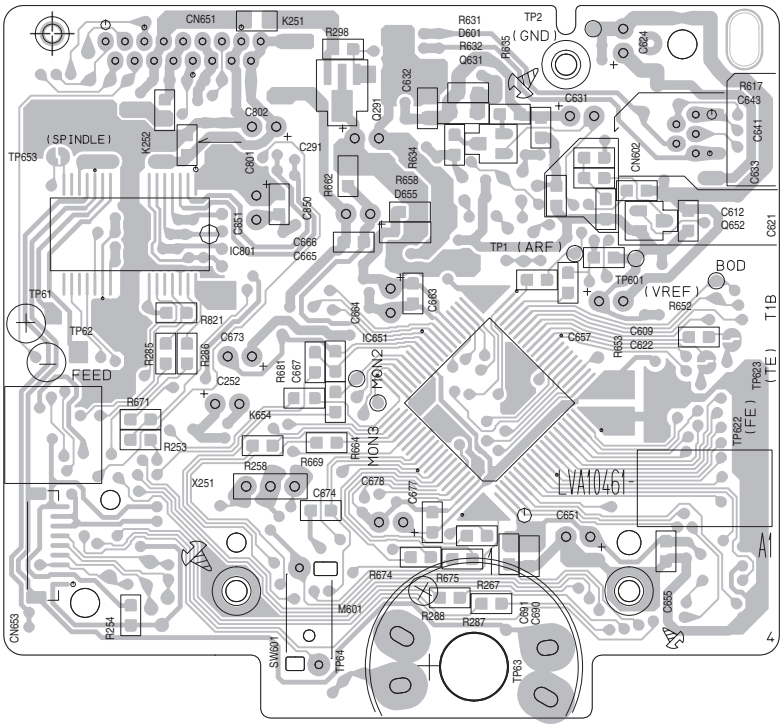

■ Loader board

Lead free solder used in the board (material : Sn-Ag-Cu, melting point : 219 Centigrade)

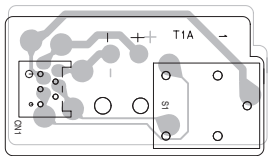

JVC
Victor Company of Japan, Limited
Audio/Video Systems Category 10-1,1chome,Ohwatari-machi,Maebashi-city,371-8543,Japan

(No.MB522SCH)

Printed in Japan
VPT

PARTS LIST

UX-G33B,UX-G33E,UX-G33EN,UX-G33EV
UX-G30B,UX-G30E,UX-G30EN,UX-G30EV

* All printed circuit boards and its assemblies are not available as service parts.

- Contents -

Exploded view of general assembly and parts list (Block No.M1) ---------- 3-2
Speaker assembly and parts list (Block No.M2) ---------- 3-5
CD mechanism assembly and parts list (Block No.MB) ---------- 3-6
CD loading base assembly and parts list (Block No.MD) ---------- 3-8
Electrical parts list (Block No.01~04) ---------- 3-10
Packing materials and accessories parts list (Block No.M3) ---------- 3-14

Exploded view of general assembly and parts list

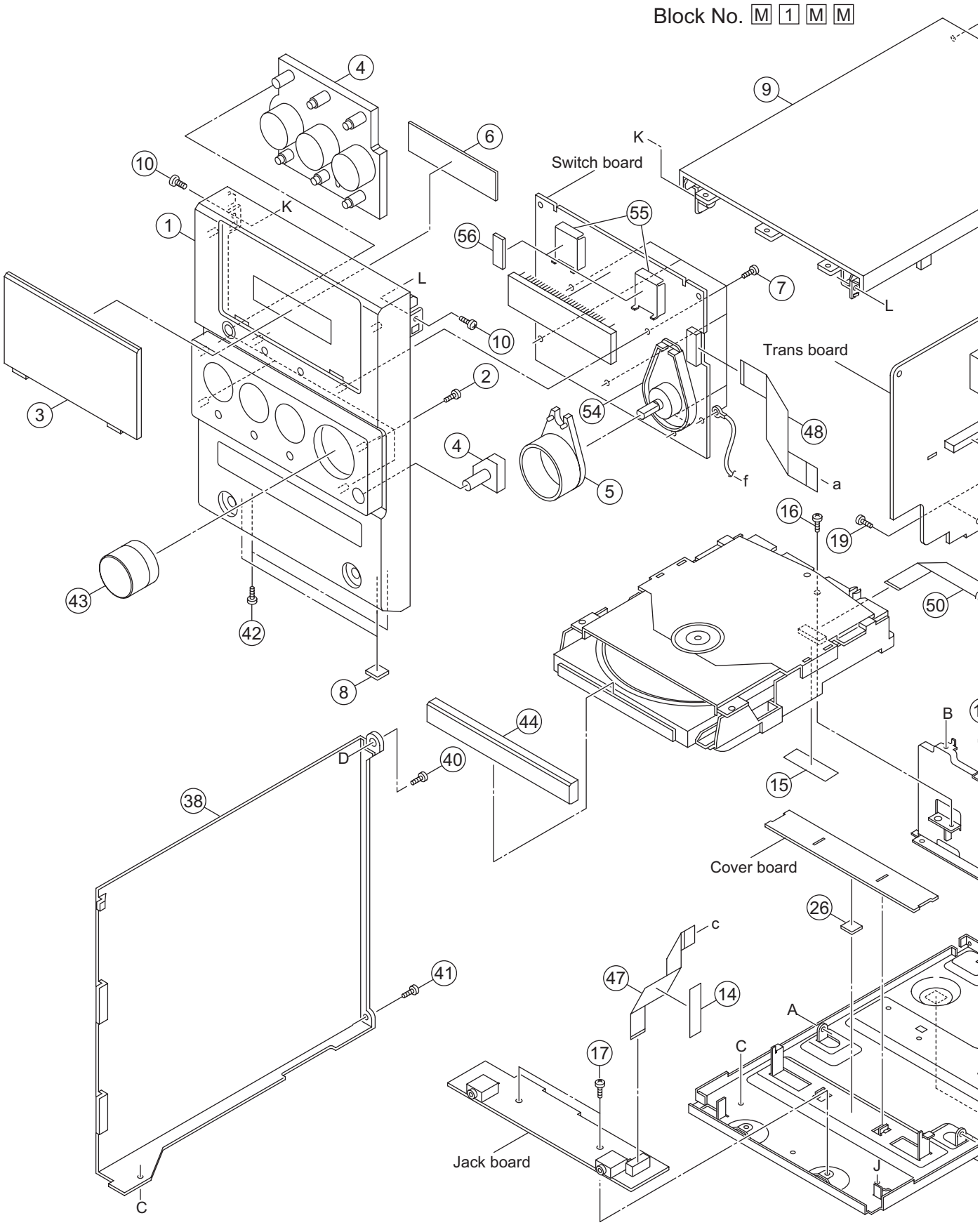

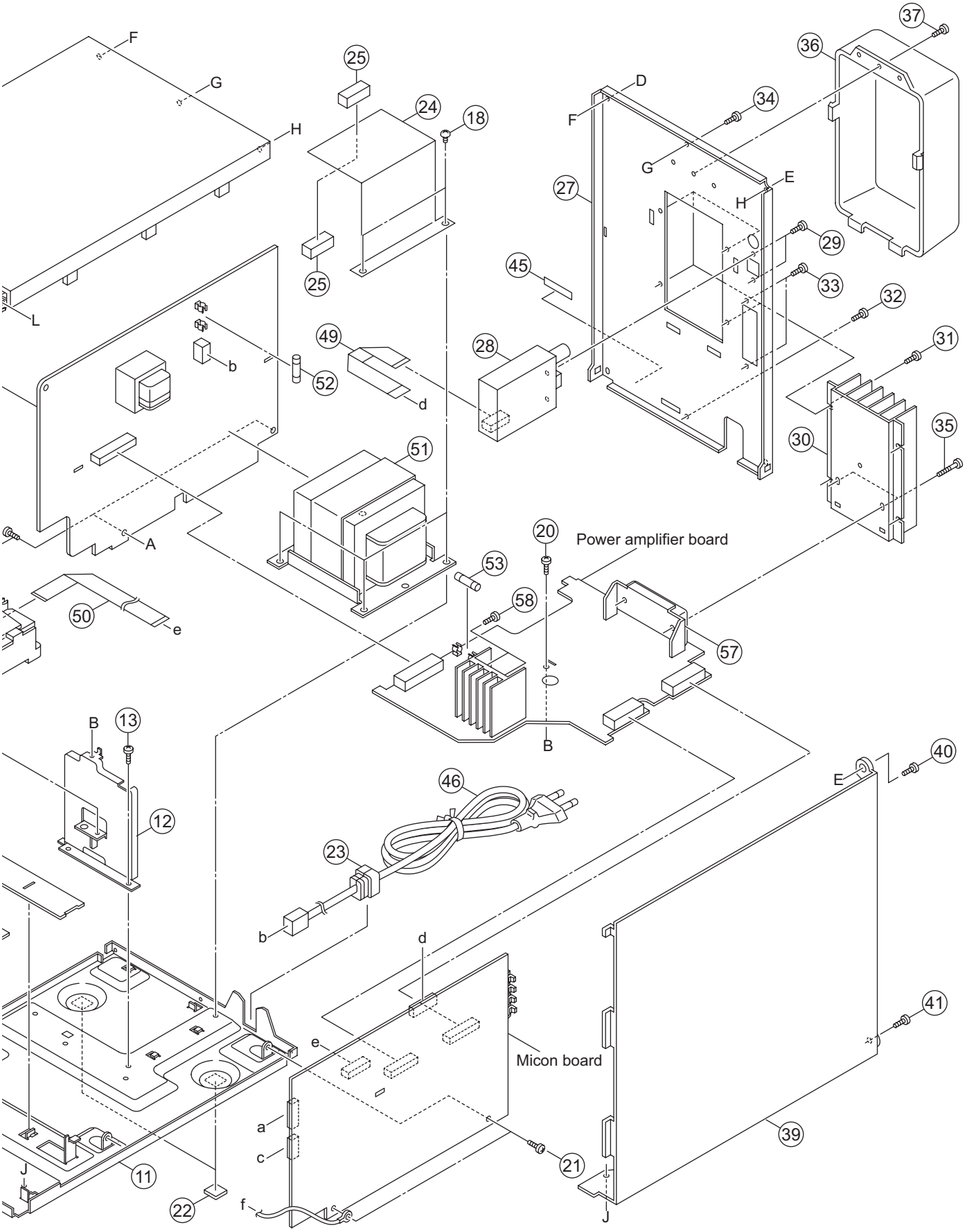
Power amplifier board
Micon board

General Assembly

Block No. [M][1][M][M]

⚠	Symbol No.	Part No.	Part Name	Description	Local
	1	GV20428-001A	FRONT PNL.ASSY.		
	2	QYSDSF2608ZA	TAP SCREW	M2.6 x 8mm(x4)	
	3	GV30832-003A	FL LENS		G33B,G33E,G33EN,G33EV
	3	GV30832-001A	FL LENS		G30B,G30E,G30EN,G30EV
	4	GV30833-001A	FRONT BTN.ASSY		
	5	GV30835-001A	VOL.RING LENS		
	6	GV40678-001A	FL SCREEN		
	7	QYSDSF2608ZA	TAP SCREW	M2.6 x 8mm(x6)	
	8	GV40313-002A	FELT SPACER	(x2)	
	9	GV10293-001A	TOP COVER A		
	10	QYSBSG3010ZA	TAP SCREW	M3 x 10mm(x2)	
	11	GV10295-001A	BOTTOM CHASSIS		
	12	GV30840-001A	SUPPORT BRACKET		
	13	QYSBST3006ZA	TAP SCREW	M3 x 6mm	
	14	GV30349-025A	SPACER		
	15	GV30349-038A	SPACER		
	16	QYSBSG3010ZA	TAP SCREW	M3 x 10mm	
	17	QYSBST3006ZA	TAP SCREW	M3 x 6mm(x2)	
	18	QYSBST4006ZA	TAP SCREW	M4 x 6mm(x3)	
	19	QYSBST3006ZA	TAP SCREW	M3 x 6mm(x2)	
	20	QYSBST3006ZA	TAP SCREW	M3 x 6mm	
	21	QYSBST3006ZA	TAP SCREW	M3 x 6mm(x2)	
	22	GV40313-002A	FELT SPACER	(x2)	
	23	QZW0033-001	STRAIN RELIEF		
	24	GV30967-001A	TRANS SHIELD		
	25	LV30225-0R3A	SPACER	(x2)	
	26	E3400-431	SPECER		
	27	GV20399-010A	REAR PANEL		G33B,G33E,G33EN
	27	GV20399-011A	REAR PANEL		G33EV
	27	GV20399-001A	REAR PANEL		G30B,G30E,G30EN
	27	GV20399-002A	REAR PANEL		G30EV
	28	QAU0413-001	TUNER		
	29	QYSBSGY3008EA	TAP SCREW	M3 x 8mm(x2)	
	30	GV30841-002A	HEAT SINK		
	31	QYSBSGY3008EA	TAP SCREW	M3 x 8mm(x4)	
	32	QYSBSGY3008EA	TAP SCREW	M3 x 8mm	
	33	QYSBSGY3008EA	TAP SCREW	M3 x 8mm(x2)	
	34	QYSBSGY3008EA	TAP SCREW	M3 x 8mm	
	35	QYSBSG3020ZA	TAP SCREW	M3 x 20mm(x2)	
	36	GV20400-001A	REAR COVER		
	37	QYSBSGY3008EA	TAP SCREW	M3 x 8mm	
	38	GV10296-001A	SIDE PANEL L		
	39	GV10297-001A	SIDE PANEL R		
	40	QYSBSGY3008EA	TAP SCREW	M3 x 8mm(x2)	
	41	QYSBSGY3008EA	TAP SCREW	M3 x 8mm(x2)	
	42	QYSBST3006ZA	TAP SCREW	M3 x 6mm(x2)	
	43	GV30837-001A	VOLUME KNOB		
	44	GV30838-001A	TRAY FITTING		
	45	GV30893-001A	NUMBER LABEL		
	46	QMPN150-200-JC	POWER CORD(EU)	2m BLACK	G33B,G30B
⚠	46	QMPK200-200-JD	POWER CORD(EU)	2m BLACK	G33E,G33EN,G33EV,G30E,G30EN,G30EV
	47	QUQU12-1011BJ-E	FFC WIRE	10pin 11cm	
	48	QUQU12-1413BJ-E	FFC WIRE	14pin 13cm	
	49	QUQU12-1511BJ-E	FFC WIRE	15pin 11cm	
	50	QUR110-1718AJ-E	FFC WIRE		
⚠	51	QQT0500-002	POWER TRANSF		
⚠	52	QMF51W2-R80-J8	FUSE	0.8A AC250V	
⚠	53	QMF51W2-1R6-J8	FUSE	1.6A AC250V	
	54	GV30836-001A	VOL.LENS HOLDER		
	55	LV43659-001A	FL HOLDER	(x2)	
	56	LV30225-0M9A	SPACER	(x2)	
	57	GV30842-001A	IC BRACKET		
	58	QYSBSG3010ZA	TAP SCREW	M3 x 10mm(x2)	

Speaker assembly and parts list

Block No. M 2 M M

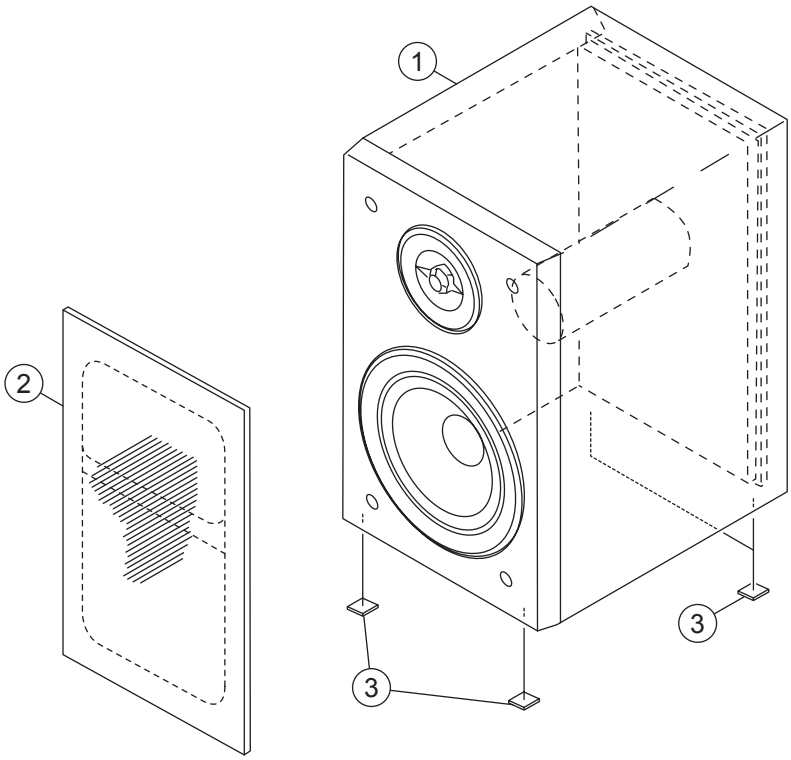

The parts without symbol number are not service.

Speaker

Block No. [M][2][M][M]

⚠	Symbol No.	Part No.	Part Name	Description	Local
	1	SPUXG33E-SPBOX	SPK WITH BOX	(x2)	G33B,G33E,G33EN,G33EV
	1	SPUXG30E-SPBOX	SPK WITH BOX	(x2)	G30B,G30E,G30EN,G30EV
	2	J201-XG3302G-50	SPK NET ASSY	(x2)	G33B,G33E,G33EN,G33EV
	2	J201-XG3001G-50	SPK NET ASSY	(x2)	G30B,G30E,G30EN,G30EV
	3	441-910102-00	RUBBER CUSHION	(x8)	

CD mechanism assembly and parts list

Block No. M B M M

FTU-JS1-1M

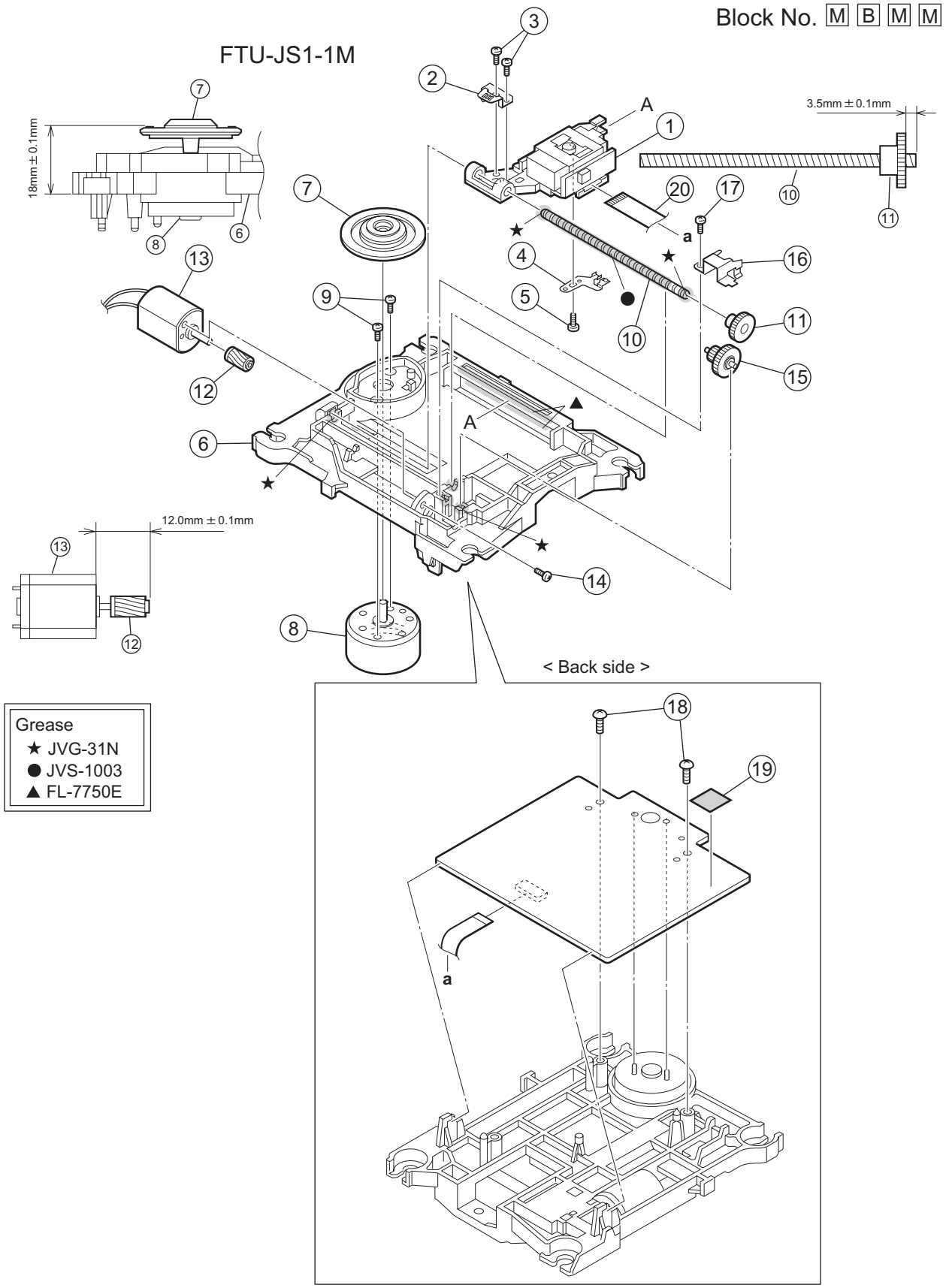

The parts without symbol number are not service.

CD mechanism

Block No. [M][B][M][M]

⚠	Symbol No.	Part No.	Part Name	Description	Local
	1	QAL0750-001	CD PICK UP		
	2	LV34564-001A	RACK ARM		
	3	QYSPSPT1720MA	SCREW	M1.7 x 2mm(x2)	
	4	LV31744-001A	P.S.SPRING		
	5	QYSPSGT1425MA	TAP SCREW	M1.4 x 2.5mm	
	6	LV10855-002A	TM CHASSIS		
	7	LV43468-001A	T.T ASSY		
	8	QAR0302-001	SPINDLE MOTOR		
	9	VKZ4743-002	SPECIAL SCREW	(x2)	
	10	LV40157-001A	SCREW SHAFT		
	11	LV43651-001A	SS GEAR		
	12	LV43650-001A	F MOTOR GEAR		
	13	QAR0303-001	FEED MOTOR		
	14	QYSPSPT2030MA	SCREW	M2 x 3mm	
	15	LV34565-002A	F MIDDLE GEAR		
	16	LV34563-001A	SHAFT HOLDER		
	17	QYSPSFT1740ZA	TAP SCREW	M1.7 x 4mm	
	18	QYSBSF2006ZA	TAP SCREW	M2 x 6mm(x2)	
	19	LV30225-073A	SPACER		
	20	QUQ105-1506BB-E	FFC WIRE	15pin 6cm	

CD loading based assembly and parts listt

Block No. M D M M

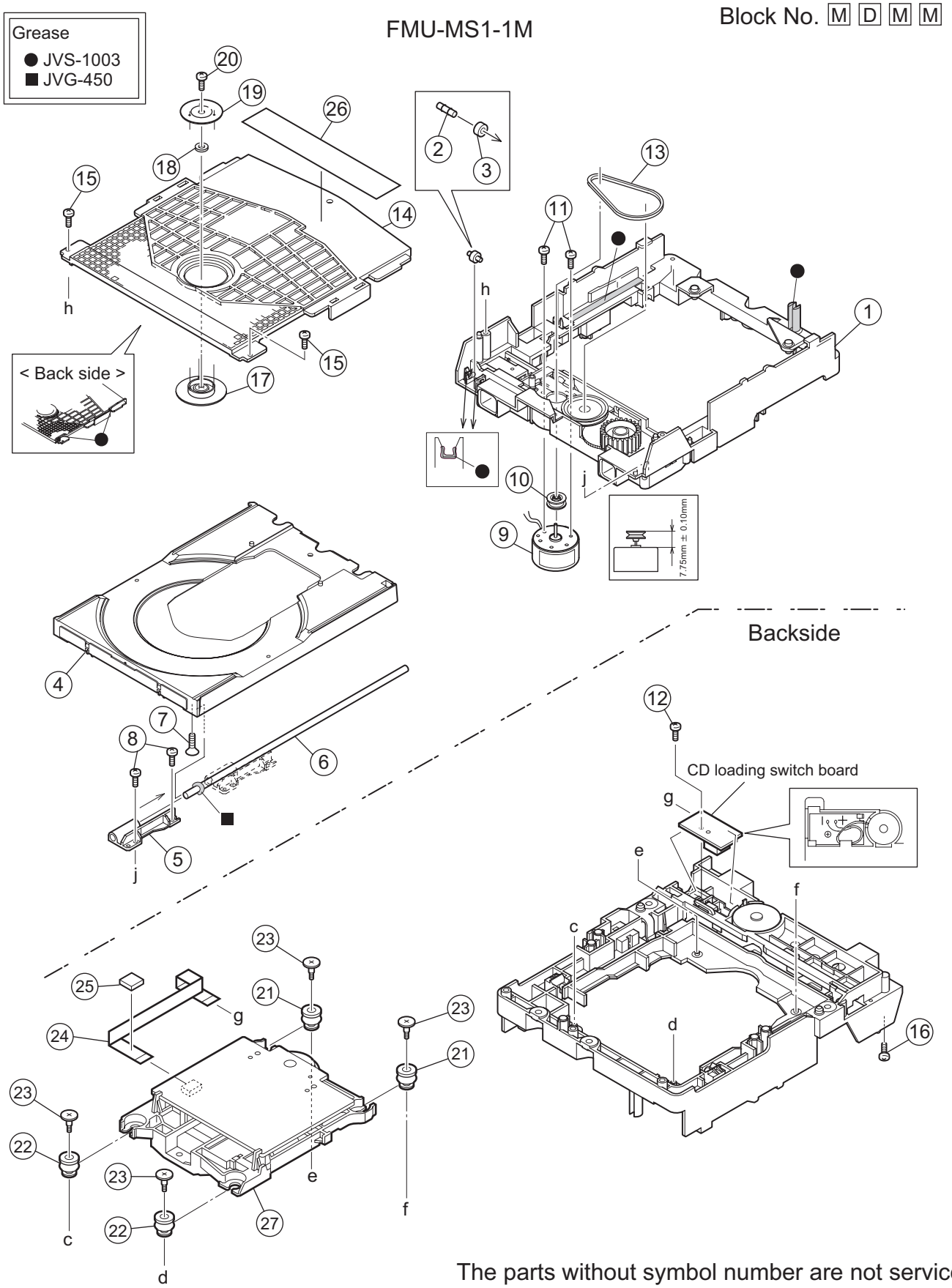

The parts without symbol number are not service.

CD loading base

Block No. [M][D][M][M]

⚠	Symbol No.		Part No.	Part Name	Description	Local
	1		LV11065-004A	LOADER SUB ASSY		
	2		E407140-001SS	C.D ROLLER		
	3		E407149-001SS	RUBBER TUBE		
	4		LV10979-002A	TRAY		
	5		LV35499-001A	SHAFT GUIDE		
	6		LV44022-001A	SHAFT		
	7		QYSSSF2008ZA	TAP SCREW	M2 x 8mm	
	8		QYSDSF2008ZA	TAP SCREW	M2 x 8mm(x2)	
	9		QAR0197-001	MOTOR		
	9	or	QAR0280-001	LOADING MOTOR		
	10		LV43844-002A	MOTOR PULLEY		
	11		QYSPSPU1730ZA	SCREW	M1.7 x 3mm(x2)	
	12		QYSDSF2008ZA	TAP SCREW	M2 x 8mm	
	13		LV43974-001A	BELT		
	14		LV21852-003A	CLAMPER BASE		
	15		QYSDSF2008ZA	TAP SCREW	M2 x 8mm(x2)	
	16		LV41741-004A	SPECIAL SCREW		
	17		LV34586-002A	CD CLAMPER		
	18		LV42930-003A	P.C.MAGNET		
	18	or	LV41118-003A	P.C.MAGNET		
	19		LV43848-001A	YOKE		
	20		LV43958-001A	SPECIAL SCREW		
	21		LE40900-003A	INSULATOR	(x2)	
	22		LE40900-004A	INSULATOR	(x2)	
	23		LV44044-001A	SPECIAL SCREW	(x4)	
	24		LV43805-001A	FFC		
	25		VYSH101-034	SPACER		
	26		LV44603-001A	LASER CATION		
	27		----------	CD TRAMECHA UNI		

Electrical parts list

Micon board

Block No. [0][1]

⚠ Symbol No.	Part No.	Part Name	Description	Local
IC200	KIA78R33PI	IC		
IC220	LC75345M-X	IC		
IC400	MN101C49GFB1	MASK ROM		
IC401	BR24L02F-W-X	IC(DIGITAL)		
IC500	PT6315	IC		
IC501	GP1UM271XKVF	IR DETECT UNIT		
IC565	RC4558D-X	IC		
IC566	RC4558D-X	IC		
Q2000	KRC102S-X	DIGI TRANSISTOR		
Q2001	KRC102S-X	DIGI TRANSISTOR		
Q2100	KTA1504/YG/-X	TRANSISTOR		
Q2101	KRC102S-X	DIGI TRANSISTOR		
Q2300	KTC3875/YG/-X	TRANSISTOR		
Q2301	KTC3875/YG/-X	TRANSISTOR		
Q2400	KTC2875-X	CHIP TR.		
Q2401	KTC2875-X	CHIP TR.		
Q2402	KRA102S-X	DIGI TRANSISTOR		
Q4000	KRC111S-X	TRANSISTOR		
Q4001	KTC3875/YG/-X	TRANSISTOR		
Q4200	KRC102S-X	DIGI TRANSISTOR		
Q5000	KRC102S-X	DIGI TRANSISTOR		
Q5660	KRC109S-X	TRANSISTOR		
D2000	1SS133-T2	SI DIODE		
D2300	1SS133-T2	SI DIODE		
D2301	1SS133-T2	SI DIODE		
D2302	1SS133-T2	SI DIODE		
D4000	1SS133-T2	SI DIODE		
D4001	1SS133-T2	SI DIODE		
D4002	MTZJ5.1B-T2	Z DIODE		
D4003	1SS133-T2	SI DIODE		
D4004	1SS133-T2	SI DIODE		
D4005	1SS133-T2	SI DIODE		
D4006	1N4003S-T5	SI DIODE		
D4007	1N4003S-T5	SI DIODE		
D4008	1N4003S-T5	SI DIODE		
D4009	1N4003S-T5	SI DIODE		
D4201	MTZJ10B-T2	Z DIODE		
D4203	1SS133-T2	SI DIODE		
D4204	1SS133-T2	SI DIODE		
D5002	SLI-343URC-W-T	LED		
D5200	SELU1E54CM-P	LED		
D5205	1SS133-T2	SI DIODE		
D5206	1SS133-T2	SI DIODE		
D5600	1SS133-T2	SI DIODE		
D5601	1SS133-T2	SI DIODE		
D5660	1SS133-T2	SI DIODE		
C2000	QETN1AM-227Z	E CAPACITOR	220uF 10V M	
C2001	QETN1AM-227Z	E CAPACITOR	220uF 10V M	
C2002	NCB31HK-103X	C CAPACITOR	0.01uF 50V K	
C2004	NCB31HK-103X	C CAPACITOR	0.01uF 50V K	
C2101	NCB31HK-561X	C CAPACITOR	560pF 50V K	
C2102	NCB31HK-561X	C CAPACITOR	560pF 50V K	
C2103	NCB31HK-103X	C CAPACITOR	0.01uF 50V K	
C2200	QETN1CM-107Z	E CAPACITOR	100uF 16V M	
C2202	QFLC1HJ-104Z	M CAPACITOR	0.1uF 50V J	
C2203	QETN1HM-226Z	E CAPACITOR	22uF 50V M	
C2204	QFLC1HJ-104Z	M CAPACITOR	0.1uF 50V J	
C2205	QFVF1HJ-184Z	MF CAPACITOR	0.18uF 50V J	
C2206	QFVF1HJ-184Z	MF CAPACITOR	0.18uF 50V J	
C2207	QFLC1HJ-104Z	M CAPACITOR	0.1uF 50V J	
C2208	QFLC1HJ-104Z	M CAPACITOR	0.1uF 50V J	
C2209	QFLC1HJ-272Z	M CAPACITOR	2700pF 50V J	
C2213	QETN1HM-475Z	E CAPACITOR	4.7uF 50V M	
C2214	QETN1HM-106Z	E CAPACITOR	10uF 50V M	
C2216	QETN1HM-475Z	E CAPACITOR	4.7uF 50V M	
C2217	QETN1CM-107Z	E CAPACITOR	100uF 16V M	
C2218	QETN1HM-475Z	E CAPACITOR	4.7uF 50V M	
C2220	QETN1HM-106Z	E CAPACITOR	10uF 50V M	
C2221	QETN1HM-475Z	E CAPACITOR	4.7uF 50V M	
C2225	QFLC1HJ-272Z	M CAPACITOR	2700pF 50V J	
C2226	QFLC1HJ-104Z	M CAPACITOR	0.1uF 50V J	
C2227	QFLC1HJ-104Z	M CAPACITOR	0.1uF 50V J	
C2228	QFVF1HJ-184Z	MF CAPACITOR	0.18uF 50V J	
C2229	QFVF1HJ-184Z	MF CAPACITOR	0.18uF 50V J	
C2230	QFLC1HJ-104Z	M CAPACITOR	0.1uF 50V J	
C2231	QETN1HM-226Z	E CAPACITOR	22uF 50V M	
C2232	QFLC1HJ-104Z	M CAPACITOR	0.1uF 50V J	
C2300	QETN1HM-106Z	E CAPACITOR	10uF 50V M	
C2301	QETN1HM-105Z	E CAPACITOR	1uF 50V M	
C2302	NCB31AK-154X	C CAPACITOR	0.15uF 10V K	
C2310	QETN1HM-105Z	E CAPACITOR	1uF 50V M	
C2400	QETN1HM-475Z	E CAPACITOR	4.7uF 50V M	
C2600	NCB31HK-392X	C CAPACITOR	3900pF 50V K	
C2601	NCB31HK-392X	C CAPACITOR	3900pF 50V K	
C2604	NCB31HK-392X	C CAPACITOR	3900pF 50V K	
C2605	NCB31HK-392X	C CAPACITOR	3900pF 50V K	
C4001	NCB31HK-103X	C CAPACITOR	0.01uF 50V K	
C4002	NCB31HK-103X	C CAPACITOR	0.01uF 50V K	
C4003	NCB31HK-103X	C CAPACITOR	0.01uF 50V K	
C4004	NDC31HJ-150X	C CAPACITOR	15pF 50V J	
C4005	NDC31HJ-150X	C CAPACITOR	15pF 50V J	
C4006	NCB31HK-103X	C CAPACITOR	0.01uF 50V K	
C4007	QETN1CM-107Z	E CAPACITOR	100uF 16V M	
C4008	QETN0JM-228Z	E CAPACITOR	2200uF 6.3V M	
C4009	QETN1HM-226Z	E CAPACITOR	22uF 50V M	
C4010	QETN1HM-475Z	E CAPACITOR	4.7uF 50V M	
C4011	QETN1CM-107Z	E CAPACITOR	100uF 16V M	
C5000	NCB31HK-103X	C CAPACITOR	0.01uF 50V K	
C5001	NCB31HK-103X	C CAPACITOR	0.01uF 50V K	
C5004	NCB31HK-103X	C CAPACITOR	0.01uF 50V K	
C5009	NCB31HK-103X	C CAPACITOR	0.01uF 50V K	
C5010	QEKC1AM-476Z	E CAPACITOR	47uF 10V M	
C5012	NCB31CK-104X	C CAPACITOR	0.1uF 16V K	
C5200	NCB31HK-103X	C CAPACITOR	0.01uF 50V K	
C5500	NCB31HK-103X	C CAPACITOR	0.01uF 50V K	
C5502	NCB31HK-102X	C CAPACITOR	1000pF 50V K	
C5503	NCB31HK-102X	C CAPACITOR	1000pF 50V K	
C5602	NCB31HK-222X	C CAPACITOR	2200pF 50V K	
C5660	QETN1HM-225Z	E CAPACITOR	2.2uF 50V M	
C5661	QETN1HM-225Z	E CAPACITOR	2.2uF 50V M	
C5662	QETN1EM-476Z	E CAPACITOR	47uF 25V M	
C5663	QETN1EM-476Z	E CAPACITOR	47uF 25V M	
C5664	QETN1HM-106Z	E CAPACITOR	10uF 50V M	
R2000	NRSA63J-103X	MG RESISTOR	10kΩ 1/16W J	
R2001	NRSA63J-472X	MG RESISTOR	4.7kΩ 1/16W J	
R2002	NRSA63J-472X	MG RESISTOR	4.7kΩ 1/16W J	
R2003	NRSA63J-104X	MG RESISTOR	100kΩ 1/16W J	
R2101	NRSA63J-203X	MG RESISTOR	20kΩ 1/16W J	
R2102	NRSA63J-203X	MG RESISTOR	20kΩ 1/16W J	
R2106	NRSA63J-103X	MG RESISTOR	10kΩ 1/16W J	
R2107	NRSA63J-102X	MG RESISTOR	1kΩ 1/16W J	
R2202	NRSA63J-302X	MG RESISTOR	3kΩ 1/16W J	
R2203	NRSA63J-222X	MG RESISTOR	2.2kΩ 1/16W J	
R2204	NRSA63J-752X	MG RESISTOR	7.5kΩ 1/16W J	
R2205	NRSA63J-752X	MG RESISTOR	7.5kΩ 1/16W J	
R2208	NRSA63J-103X	MG RESISTOR	10kΩ 1/16W J	
R2209	NRSA63J-154X	MG RESISTOR	150kΩ 1/16W J	
R2210	NRSA63J-154X	MG RESISTOR	150kΩ 1/16W J	
R2211	NRSA63J-103X	MG RESISTOR	10kΩ 1/16W J	
R2214	NRSA63J-752X	MG RESISTOR	7.5kΩ 1/16W J	
R2215	NRSA63J-752X	MG RESISTOR	7.5kΩ 1/16W J	
R2216	NRSA63J-222X	MG RESISTOR	2.2kΩ 1/16W J	
R2217	NRSA63J-302X	MG RESISTOR	3kΩ 1/16W J	
R2300	NRSA63J-113X	MG RESISTOR	11kΩ 1/16W J	
R2301	NRSA63J-513X	MG RESISTOR	51kΩ 1/16W J	
R2302	NRSA63J-473X	MG RESISTOR	47kΩ 1/16W J	
R2303	NRSA63J-473X	MG RESISTOR	47kΩ 1/16W J	
R2304	NRSA63J-113X	MG RESISTOR	11kΩ 1/16W J	
R2305	NRSA63J-124X	MG RESISTOR	120kΩ 1/16W J	
R2306	NRSA63J-334X	MG RESISTOR	330kΩ 1/16W J	
R2307	NRSA63J-362X	MG RESISTOR	3.6kΩ 1/16W J	
R2308	NRSA63J-563X	MG RESISTOR	56kΩ 1/16W J	
R2309	NRSA63J-563X	MG RESISTOR	56kΩ 1/16W J	
R2400	QRJ146J-821X	UNF C RESISTOR	820Ω 1/4W J	

⚠ Symbol No.	Part No.	Part Name	Description	Local
R2401	QRJ146J-821X	UNF C RESISTOR	820Ω 1/4W J	
R2402	QRJ146J-821X	UNF C RESISTOR	820Ω 1/4W J	
R2403	QRJ146J-821X	UNF C RESISTOR	820Ω 1/4W J	
R2404	NRSA63J-103X	MG RESISTOR	10kΩ 1/16W J	
R2405	NRSA63J-103X	MG RESISTOR	10kΩ 1/16W J	
R4002	NRSA63J-103X	MG RESISTOR	10kΩ 1/16W J	
R4008	NRSA63J-222X	MG RESISTOR	2.2kΩ 1/16W J	
R4009	NRSA63J-222X	MG RESISTOR	2.2kΩ 1/16W J	
R4010	NRSA63J-103X	MG RESISTOR	10kΩ 1/16W J	
R4011	NRSA63J-103X	MG RESISTOR	10kΩ 1/16W J	
R4014	NRSA63J-222X	MG RESISTOR	2.2kΩ 1/16W J	
R4015	NRSA63J-472X	MG RESISTOR	4.7kΩ 1/16W J	
R4016	NRSA63J-222X	MG RESISTOR	2.2kΩ 1/16W J	
R4017	NRSA63J-222X	MG RESISTOR	2.2kΩ 1/16W J	
R4018	NRSA63J-222X	MG RESISTOR	2.2kΩ 1/16W J	
R4020	NRSA63J-103X	MG RESISTOR	10kΩ 1/16W J	
R4023	NRSA63J-103X	MG RESISTOR	10kΩ 1/16W J	
R4024	NRSA63J-103X	MG RESISTOR	10kΩ 1/16W J	
R4025	NRSA63J-222X	MG RESISTOR	2.2kΩ 1/16W J	
R4026	NRSA63J-222X	MG RESISTOR	2.2kΩ 1/16W J	
R4027	NRSA63J-222X	MG RESISTOR	2.2kΩ 1/16W J	
R4028	NRSA63J-222X	MG RESISTOR	2.2kΩ 1/16W J	
R4029	NRSA63J-222X	MG RESISTOR	2.2kΩ 1/16W J	
R4030	NRSA63J-103X	MG RESISTOR	10kΩ 1/16W J	
R4031	NRSA63J-102X	MG RESISTOR	1kΩ 1/16W J	
R4032	NRSA63J-222X	MG RESISTOR	2.2kΩ 1/16W J	
R4033	NRSA63J-103X	MG RESISTOR	10kΩ 1/16W J	
R4036	NRSA63J-102X	MG RESISTOR	1kΩ 1/16W J	
R4037	NRSA63J-102X	MG RESISTOR	1kΩ 1/16W J	
R4038	NRSA63J-102X	MG RESISTOR	1kΩ 1/16W J	
R4039	NRSA63J-104X	MG RESISTOR	100kΩ 1/16W J	
R4040	NRSA63J-102X	MG RESISTOR	1kΩ 1/16W J	
R4041	NRSA63J-102X	MG RESISTOR	1kΩ 1/16W J	
R4043	NRSA63J-203X	MG RESISTOR	20kΩ 1/16W J	
R4044	NRSA63J-222X	MG RESISTOR	2.2kΩ 1/16W J	
R4046	NRSA63J-222X	MG RESISTOR	2.2kΩ 1/16W J	
R4047	NRSA63J-103X	MG RESISTOR	10kΩ 1/16W J	
R4052	NRSA63J-222X	MG RESISTOR	2.2kΩ 1/16W J	
R4053	NRSA63J-222X	MG RESISTOR	2.2kΩ 1/16W J	
R4054	NRSA63J-222X	MG RESISTOR	2.2kΩ 1/16W J	
R4055	NRSA63J-222X	MG RESISTOR	2.2kΩ 1/16W J	
R4056	NRSA63J-103X	MG RESISTOR	10kΩ 1/16W J	
R4060	NRSA63J-103X	MG RESISTOR	10kΩ 1/16W J	
R4061	NRSA63J-331X	MG RESISTOR	330Ω 1/16W J	
R4062	NRSA63J-103X	MG RESISTOR	10kΩ 1/16W J	
R4063	NRSA63J-103X	MG RESISTOR	10kΩ 1/16W J	
R4064	NRSA63J-104X	MG RESISTOR	100kΩ 1/16W J	
R4065	NRSA63J-473X	MG RESISTOR	47kΩ 1/16W J	
R4066	NRSA63J-333X	MG RESISTOR	33kΩ 1/16W J	
R4067	NRSA63J-102X	MG RESISTOR	1kΩ 1/16W J	
R4068	NRSA63J-103X	MG RESISTOR	10kΩ 1/16W J	
R4070	NRSA63J-103X	MG RESISTOR	10kΩ 1/16W J	
R4071	NRSA63J-103X	MG RESISTOR	10kΩ 1/16W J	
R4072	NRSA63J-103X	MG RESISTOR	10kΩ 1/16W J	
R4073	NRSA63J-103X	MG RESISTOR	10kΩ 1/16W J	
R4083	NRSA63J-222X	MG RESISTOR	2.2kΩ 1/16W J	
R4200	NRSA63J-103X	MG RESISTOR	10kΩ 1/16W J	
R4203	NRSA63J-473X	MG RESISTOR	47kΩ 1/16W J	
R4204	NRSA63J-153X	MG RESISTOR	15kΩ 1/16W J	
R5000	NRSA63J-823X	MG RESISTOR	82kΩ 1/16W J	
R5002	NRSA63J-102X	MG RESISTOR	1kΩ 1/16W J	
R5100	NRSA63J-911X	MG RESISTOR	910Ω 1/16W J	
R5101	NRSA63J-242X	MG RESISTOR	2.4kΩ 1/16W J	
R5102	NRSA63J-392X	MG RESISTOR	3.9kΩ 1/16W J	
R5103	NRSA63J-682X	MG RESISTOR	6.8kΩ 1/16W J	
R5104	NRSA63J-153X	MG RESISTOR	15kΩ 1/16W J	
R5105	NRSA63J-911X	MG RESISTOR	910Ω 1/16W J	
R5106	NRSA63J-242X	MG RESISTOR	2.4kΩ 1/16W J	
R5107	NRSA63J-392X	MG RESISTOR	3.9kΩ 1/16W J	
R5108	NRSA63J-682X	MG RESISTOR	6.8kΩ 1/16W J	
R5109	NRSA63J-153X	MG RESISTOR	15kΩ 1/16W J	
R5200	NRSA63J-470X	MG RESISTOR	47Ω 1/16W J	
R5202	NRSA63J-104X	MG RESISTOR	100kΩ 1/16W J	
R5204	NRSA63J-331X	MG RESISTOR	330Ω 1/16W J	
R5501	NRSA63J-102X	MG RESISTOR	1kΩ 1/16W J	
R5600	NRSA63J-102X	MG RESISTOR	1kΩ 1/16W J	
R5601	NRSA63J-243X	MG RESISTOR	24kΩ 1/16W J	
R5602	NRSA63J-303X	MG RESISTOR	30kΩ 1/16W J	
R5603	NRSA63J-243X	MG RESISTOR	24kΩ 1/16W J	
R5604	NRSA63J-303X	MG RESISTOR	30kΩ 1/16W J	
R5662	NRSA63J-104X	MG RESISTOR	100kΩ 1/16W J	
R5663	NRSA63J-104X	MG RESISTOR	100kΩ 1/16W J	
R5664	NRSA63J-472X	MG RESISTOR	4.7kΩ 1/16W J	
R5665	NRSA63J-472X	MG RESISTOR	4.7kΩ 1/16W J	
R5666	NRSA63J-472X	MG RESISTOR	4.7kΩ 1/16W J	
R5667	NRSA63J-472X	MG RESISTOR	4.7kΩ 1/16W J	
R5668	NRSA63J-224X	MG RESISTOR	220kΩ 1/16W J	
R5669	NRSA63J-104X	MG RESISTOR	100kΩ 1/16W J	
R5671	NRSA63J-103X	MG RESISTOR	10kΩ 1/16W J	
R5672	NRSA63J-562X	MG RESISTOR	5.6kΩ 1/16W J	
CN400	QGF1205F2-10	CONNECTOR	FFC/FPC (1-10)	
CN401	QGF1205F2-14	CONNECTOR	FFC/FPC (1-14)	
CN402	QGB2510J1-11	CONNECTOR	B-B (1-11)	
CN403	QGB2510J1-10	CONNECTOR	B-B (1-10)	
CN405	QGF1205F2-15	CONNECTOR	FFC/FPC (1-15)	
CN406	QGF1036C2-17	CONNECTOR	FFC/FPC (1-17)	
CN500	QGF1205F2-14	CONNECTOR	FFC/FPC (1-14)	
CN550	QGF1205C2-10	CONNECTOR	FFC/FPC (1-10)	
⚠ DI500	QLF0165-001	FL TUBE		
EP550	QNZ0136-001Z	EARTH PLATE		
EP560	QNZ0136-001Z	EARTH PLATE		
J2600	QNB0292-001	SPK TERMINAL		
J5500	QNS0173-001	JACK		
J5600	QNS0173-001	JACK		
JS500	QSW1059-001	JOG VOLUME		
K2000	QQR0621-001Z	COIL		
PP560	QZW0112-001	WIRE CLAMP		
S5100	QSW0683-001Z	PUSH SW I.M		
S5101	QSW0683-001Z	PUSH SW I.M		
S5102	QSW0683-001Z	PUSH SW I.M		
S5103	QSW0683-001Z	PUSH SW I.M		
S5104	QSW0683-001Z	PUSH SW I.M		
S5105	QSW0683-001Z	PUSH SW I.M		
S5106	QSW0683-001Z	PUSH SW I.M		
S5107	QSW0683-001Z	PUSH SW I.M		
S5108	QSW0683-001Z	PUSH SW I.M		
S5109	QSW0683-001Z	PUSH SW I.M		
X4000	QAX0711-002Z	CRYSTAL	8.000000MHz	

Power board

Block No. [0][2]

⚠ Symbol No.	Part No.	Part Name	Description	Local
⚠ IC110	KIA278R12PI-U/P	IC		
IC120	KIA7809API	IC		
⚠ IC150	STK432-050-E	IC(HYBRID)		
IC951	KIA7805API	IC		
Q950	KTC3875/YG/-X	TRANSISTOR		
Q1000	KTA1267/YG/-T	TRANSISTOR		
Q1250	KTC3875/YG/-X	TRANSISTOR		
Q1251	KRA102S-X	DIGI TRANSISTOR		
Q1500	KTA1504/YG/-X	TRANSISTOR		
Q1501	KTA1504/YG/-X	TRANSISTOR		
Q1502	KTC3875/YG/-X	TRANSISTOR		
Q1600	KTC3875/YG/-X	TRANSISTOR		
Q1601	KTA1504/YG/-X	TRANSISTOR		
Q1650	KRA102S-X	DIGI TRANSISTOR		
Q1651	KTC2875-X	CHIP TR.		
Q1652	KTC2875-X	CHIP TR.		
Q1850	KTC3875/YG/-X	TRANSISTOR		
⚠ D900	1N5402M-20	SI DIODE		
⚠ D901	1N5402M-20	SI DIODE		
⚠ D902	1N5402M-20	SI DIODE		
⚠ D903	1N5402M-20	SI DIODE		
⚠ D950	1N4003S-T5	SI DIODE		
⚠ D951	1N4003S-T5	SI DIODE		
⚠ D952	1N4003S-T5	SI DIODE		
⚠ D953	1N4003S-T5	SI DIODE		

⚠ Symbol No.	Part No.	Part Name	Description	Local
D954	1SS133-T2	SI DIODE		
D955	1N4003S-T5	SI DIODE		
D956	1SS133-T2	SI DIODE		
⚠ D1000	1N4003S-T5	SI DIODE		
D1001	MTZJ22A-T2	Z DIODE		
D1002	MTZJ5.6B-T2	Z DIODE		
D1250	1SS133-T2	SI DIODE		
⚠ D1401	2A02-M	DIODE		
⚠ D1402	2A02-M	DIODE		
⚠ D1403	2A02-M	DIODE		
⚠ D1404	2A02-M	DIODE		
D1500	MTZJ9.1B-T2	Z DIODE		
D1501	1SS133-T2	SI DIODE		
D1502	1SS133-T2	SI DIODE		
⚠ D1503	MTZJ9.1B-T2	Z DIODE		
D1600	1SS133-T2	SI DIODE		
D1851	1SS133-T2	SI DIODE		
C904	QFNC2AJ-104Z	M CAPACITOR	0.1uF 100V J	
C911	QCZ9105-472	C CAPACITOR	4700pF 250V M	
C950	QETN1EM-227Z	E CAPACITOR	220uF 25V M	
C952	QETN1CM-107Z	E CAPACITOR	100uF 16V M	
C1000	QETN1VM-227Z	E CAPACITOR	220uF 35V M	
C1001	NCB31HK-103X	C CAPACITOR	0.01uF 50V K	
C1002	QETN1HM-226Z	E CAPACITOR	22uF 50V M	
C1003	QETN1HM-475Z	E CAPACITOR	4.7uF 50V M	
C1100	QETN1EM-227Z	E CAPACITOR	220uF 25V M	
C1200	QETN1CM-107Z	E CAPACITOR	100uF 16V M	
C1250	QETM1VM-228	E CAPACITOR	2200uF 35V M	
C1251	QETM1VM-228	E CAPACITOR	2200uF 35V M	
C1252	QETM1EM-228	E CAPACITOR	2200uF 25V M	
C1406	QFLC1HJ-104Z	M CAPACITOR	0.1uF 50V J	
C1500	NDC31HJ-560X	C CAPACITOR	56pF 50V J	
C1501	QTE1V06-106Z	E CAPACITOR	10uF 35V	
C1502	NCB31HK-471X	C CAPACITOR	470pF 50V K	
C1503	NCB31HK-471X	C CAPACITOR	470pF 50V K	
C1504	QTE1V06-106Z	E CAPACITOR	10uF 35V	
C1505	QETN1HM-106Z	E CAPACITOR	10uF 50V M	
C1506	QETN1VM-476Z	E CAPACITOR	47uF 35V M	
C1507	NDC31HJ-5R0X	C CAPACITOR	5pF 50V J	
C1508	QFVF1HJ-684Z	MF CAPACITOR	0.68uF 50V J	
C1509	QFVF1HJ-684Z	MF CAPACITOR	0.68uF 50V J	
C1514	QETN1HM-106Z	E CAPACITOR	10uF 50V M	
C1515	QFVF1HJ-684Z	MF CAPACITOR	0.68uF 50V J	
C1516	QFVF1HJ-684Z	MF CAPACITOR	0.68uF 50V J	
C1517	NDC31HJ-5R0X	C CAPACITOR	5pF 50V J	
C1518	QETN1VM-476Z	E CAPACITOR	47uF 35V M	
C1519	NDC31HJ-560X	C CAPACITOR	56pF 50V J	
C1520	QETN1HM-226Z	E CAPACITOR	22uF 50V M	
C1600	QETN1VM-476Z	E CAPACITOR	47uF 35V M	
C1601	QETN1HM-226Z	E CAPACITOR	22uF 50V M	
C1650	QETN1HM-475Z	E CAPACITOR	4.7uF 50V M	
R1000	QRJ146J-332X	UNF C RESISTOR	3.3kΩ 1/4W J	
R1250	NRSA63J-103X	MG RESISTOR	10kΩ 1/16W J	
R1251	NRSA63J-223X	MG RESISTOR	22kΩ 1/16W J	
R1500	NRSA63J-563X	MG RESISTOR	56kΩ 1/16W J	
R1501	NRSA63J-102X	MG RESISTOR	1kΩ 1/16W J	
R1502	NRSA63J-102X	MG RESISTOR	1kΩ 1/16W J	
⚠ R1503	NRSA63J-182X	MG RESISTOR	1.8kΩ 1/16W J	
⚠ R1504	NRSA63J-182X	MG RESISTOR	1.8kΩ 1/16W J	
R1505	NRSA63J-102X	MG RESISTOR	1kΩ 1/16W J	
R1506	NRSA63J-102X	MG RESISTOR	1kΩ 1/16W J	
R1507	NRSA63J-563X	MG RESISTOR	56kΩ 1/16W J	
R1508	NRSA63J-563X	MG RESISTOR	56kΩ 1/16W J	
R1509	QRJ146J-182X	UNF C RESISTOR	1.8kΩ 1/4W J	
⚠ R1510	QRJ146J-2R2X	UNF C RESISTOR	2.2Ω 1/4W J	
R1511	QRJ146J-2R2X	UNF C RESISTOR	2.2Ω 1/4W J	
R1512	NRSA63J-333X	MG RESISTOR	33kΩ 1/16W J	
R1513	QRT01DJ-R22X	MF RESISTOR	0.22Ω 1W J	
R1514	QRJ146J-101X	UNF C RESISTOR	100Ω 1/4W J	
R1515	NRSA63J-221X	MG RESISTOR	220Ω 1/16W J	
R1516	NRSA63J-103X	MG RESISTOR	10kΩ 1/16W J	
R1517	NRSA63J-222X	MG RESISTOR	2.2kΩ 1/16W J	
R1518	NRSA63J-221X	MG RESISTOR	220Ω 1/16W J	
R1519	QRT01DJ-R22X	MF RESISTOR	0.22Ω 1W J	
R1520	QRJ146J-101X	UNF C RESISTOR	100Ω 1/4W J	
R1521	NRSA63J-222X	MG RESISTOR	2.2kΩ 1/16W J	
R1522	NRSA63J-103X	MG RESISTOR	10kΩ 1/16W J	
R1523	QRJ146J-100X	UNF C RESISTOR	10Ω 1/4W J	
⚠ R1524	QRJ146J-2R2X	UNF C RESISTOR	2.2Ω 1/4W J	
R1525	QRJ146J-2R2X	UNF C RESISTOR	2.2Ω 1/4W J	
R1526	NRSA63J-563X	MG RESISTOR	56kΩ 1/16W J	
R1527	QRJ146J-182X	UNF C RESISTOR	1.8kΩ 1/4W J	
R1528	NRSA63J-472X	MG RESISTOR	4.7kΩ 1/16W J	
R1529	NRSA63J-124X	MG RESISTOR	120kΩ 1/16W J	
R1530	NRSA63J-103X	MG RESISTOR	10kΩ 1/16W J	
R1531	NRSA63J-104X	MG RESISTOR	100kΩ 1/16W J	
R1532	NRSA63J-103X	MG RESISTOR	10kΩ 1/16W J	
R1533	NRSA63J-104X	MG RESISTOR	100kΩ 1/16W J	
R1534	NRSA63J-823X	MG RESISTOR	82kΩ 1/16W J	
R1600	NRSA63J-104X	MG RESISTOR	100kΩ 1/16W J	
R1601	NRSA63J-302X	MG RESISTOR	3kΩ 1/16W J	
R1652	NRSA63J-103X	MG RESISTOR	10kΩ 1/16W J	
R1653	NRSA63J-103X	MG RESISTOR	10kΩ 1/16W J	
R1851	NRSA63J-302X	MG RESISTOR	3kΩ 1/16W J	
⚠ L1500	QQLZ035-R39	COIL	0.39uH	
L1501	QQLZ035-R39	COIL	0.39uH	
⚠ T950	QQT0253-013	POWER TRANSF		
CN150	QGB2510K2-13	CONNECTOR	B-B (1-13)	
CN151	QGB2510K2-10	CONNECTOR	B-B (1-10)	
CN152	QGB2510K2-11	CONNECTOR	B-B (1-11)	
⚠ CN900	QGA7901C1-02	CONNECTOR	W-B (1-2)	
CN901	QGB2510J1-13	CONNECTOR	B-B (1-13)	
EP150	QNZ0136-001Z	EARTH PLATE		
FT140	QNG0003-001Z	FUSE CLIP		
FT141	QNG0003-001Z	FUSE CLIP		
FT901	QNG0003-001Z	FUSE CLIP		
FT902	QNG0003-001Z	FUSE CLIP		
HS110	GV40620-006A	HEAT SINK		
⚠ RY185	QSK0127-001	RELAY		
⚠ RY950	QSK0129-002	RELAY		

CD servo board

Block No. [0][3]

⚠ Symbol No.	Part No.	Part Name	Description	Local
IC201	BR24L08FV-W-X	IC		
IC251	MN101C61GNA1	IC		
IC601	AN22002A-W	IC		
IC651	MN6627934CH	IC		
IC671	A42L2604V-45F	IC		
IC681	SN74AHC1G32DC-X	IC		
IC682	SN74LV08APW-X	IC		
IC801	LA6575H-X	IC		
Q291	2SB1424/QR/-W	TRANSISTOR		
Q631	2SA1037AK/RS/-X	TRANSISTOR		
Q851	2SB1424/QR/-W	TRANSISTOR		
C201	NCB31CK-104X	C CAPACITOR	0.1uF 16V K	
C251	NCB31CK-104X	C CAPACITOR	0.1uF 16V K	
C252	QEKJ0JM-476Z	E CAPACITOR	47uF 6.3V M	
C253	NCB31CK-104X	C CAPACITOR	0.1uF 16V K	
C259	NDC31HJ-101X	C CAPACITOR	100pF 50V J	
C291	QERF0JM-226Z	E CAPACITOR	22uF 6.3V M	
C603	NCB31CK-104X	C CAPACITOR	0.1uF 16V K	
C604	NCB31CK-104X	C CAPACITOR	0.1uF 16V K	
C605	NDC31HJ-391X	C CAPACITOR	390pF 50V J	
C606	NDC31HJ-560X	C CAPACITOR	56pF 50V J	
C609	NDC31HJ-470X	C CAPACITOR	47pF 50V J	
C610	NCB31CK-563X	C CAPACITOR	0.056uF 16V K	
C611	NCB31CK-104X	C CAPACITOR	0.1uF 16V K	
C612	NCB31CK-104X	C CAPACITOR	0.1uF 16V K	
C614	NCB31CK-393X	C CAPACITOR	0.039uF 16V K	
C615	NCB31HK-272X	C CAPACITOR	2700pF 50V K	
C616	NCB31HK-182X	C CAPACITOR	1800pF 50V K	
C621	NCB31CK-104X	C CAPACITOR	0.1uF 16V K	
C622	QEKJ0JM-107Z	E CAPACITOR	100uF 6.3V M	

⚠ Symbol No.	Part No.	Part Name	Description	Local
C623	NCB31CK-104X	C CAPACITOR	0.1uF 16V K	
C624	QEKJ0JM-107Z	E CAPACITOR	100uF 6.3V M	
C631	QEKJ1CM-106Z	E CAPACITOR	10uF 16V M	
C632	NCB31CK-104X	C CAPACITOR	0.1uF 16V K	
C633	NCB31EK-223X	C CAPACITOR	0.022uF 25V K	
C641	NDC31HJ-680X	C CAPACITOR	68pF 50V J	
C651	QEKJ0JM-107Z	E CAPACITOR	100uF 6.3V M	
C652	NCB31CK-104X	C CAPACITOR	0.1uF 16V K	
C653	NCB31CK-104X	C CAPACITOR	0.1uF 16V K	
C654	NCB31CK-104X	C CAPACITOR	0.1uF 16V K	
C655	NCB31CK-104X	C CAPACITOR	0.1uF 16V K	
C656	NCB31CK-104X	C CAPACITOR	0.1uF 16V K	
C657	NCS31HJ-681X	C CAPACITOR	680pF 50V J	
C658	NCB31CK-104X	C CAPACITOR	0.1uF 16V K	
C659	NCB31EK-223X	C CAPACITOR	0.022uF 25V K	
C661	NCB31HK-102X	C CAPACITOR	1000pF 50V K	
C662	NCB31CK-823X	C CAPACITOR	0.082uF 16V K	
C663	NCB31CK-104X	C CAPACITOR	0.1uF 16V K	
C664	QERF0JM-476Z	E CAPACITOR	47uF 6.3V M	
C665	NCB31CK-104X	C CAPACITOR	0.1uF 16V K	
C666	QEKJ0JM-107Z	E CAPACITOR	100uF 6.3V M	
C667	NCB31CK-104X	C CAPACITOR	0.1uF 16V K	
C669	NCB31HK-222X	C CAPACITOR	2200pF 50V K	
C672	NCB31HK-222X	C CAPACITOR	2200pF 50V K	
C673	QEKJ1CM-106Z	E CAPACITOR	10uF 16V M	
C674	NCB31CK-104X	C CAPACITOR	0.1uF 16V K	
C675	NDC31HJ-100X	C CAPACITOR	10pF 50V J	
C676	NDC31HJ-100X	C CAPACITOR	10pF 50V J	
C677	NCB31CK-104X	C CAPACITOR	0.1uF 16V K	
C678	QEKJ0JM-107Z	E CAPACITOR	100uF 6.3V M	
C681	NCB31CK-103X	C CAPACITOR	0.01uF 16V K	
C690	NCB31CK-104X	C CAPACITOR	0.1uF 16V K	
C801	NCB31CK-104X	C CAPACITOR	0.1uF 16V K	
C802	QERF1AM-227Z	E CAPACITOR	220uF 10V M	
C803	NCB31AK-474X	C CAPACITOR	0.47uF 10V K	
C804	NCB31CK-183X	C CAPACITOR	0.018uF 16V K	
C805	NCB31HK-222X	C CAPACITOR	2200pF 50V K	
C806	NCB31HK-152X	C CAPACITOR	1500pF 50V K	
C850	NCB21CK-105X	C CAPACITOR	1uF 16V K	
C851	QEKJ1CM-107Z	E CAPACITOR	100uF 16V M	
R253	NRSA63J-103X	MG RESISTOR	10kΩ 1/16W J	
R255	NRSA63J-102X	MG RESISTOR	1kΩ 1/16W J	
R256	NRSA63J-102X	MG RESISTOR	1kΩ 1/16W J	
R258	NRSA63J-102X	MG RESISTOR	1kΩ 1/16W J	
R259	NRSA63J-103X	MG RESISTOR	10kΩ 1/16W J	
R265	NRSA63J-103X	MG RESISTOR	10kΩ 1/16W J	
R267	NRSA63J-102X	MG RESISTOR	1kΩ 1/16W J	
R271	NRSA63J-102X	MG RESISTOR	1kΩ 1/16W J	
R274	NRSA63J-102X	MG RESISTOR	1kΩ 1/16W J	
R278	NRSA63J-102X	MG RESISTOR	1kΩ 1/16W J	
R285	NRSA63J-102X	MG RESISTOR	1kΩ 1/16W J	
R286	NRSA63J-102X	MG RESISTOR	1kΩ 1/16W J	
R287	NRSA63J-102X	MG RESISTOR	1kΩ 1/16W J	
R288	NRSA63J-102X	MG RESISTOR	1kΩ 1/16W J	
R293	NRSA63J-473X	MG RESISTOR	47kΩ 1/16W J	
R294	NRSA63J-473X	MG RESISTOR	47kΩ 1/16W J	
R295	NRSA63J-473X	MG RESISTOR	47kΩ 1/16W J	
R296	NRSA63J-103X	MG RESISTOR	10kΩ 1/16W J	
R297	NRSA63J-122X	MG RESISTOR	1.2kΩ 1/16W J	
R298	NRSA63J-103X	MG RESISTOR	10kΩ 1/16W J	
R601	NRSA63J-562X	MG RESISTOR	5.6kΩ 1/16W J	
R602	NRSA63J-392X	MG RESISTOR	3.9kΩ 1/16W J	
R603	NRSA63J-473X	MG RESISTOR	47kΩ 1/16W J	
R604	NRSA63J-274X	MG RESISTOR	270kΩ 1/16W J	
R605	NRSA63J-0R0X	MG RESISTOR	0Ω 1/16W J	
R606	NRSA63J-0R0X	MG RESISTOR	0Ω 1/16W J	
R607	NRSA63J-473X	MG RESISTOR	47kΩ 1/16W J	
R608	NRSA63J-473X	MG RESISTOR	47kΩ 1/16W J	
R611	NRSA63J-562X	MG RESISTOR	5.6kΩ 1/16W J	
R613	NRSA63J-472X	MG RESISTOR	4.7kΩ 1/16W J	
R617	NRSA63J-152X	MG RESISTOR	1.5kΩ 1/16W J	
R631	NRSA63J-2R2X	MG RESISTOR	2.2Ω 1/16W J	
R632	NRSA63J-3R9X	MG RESISTOR	3.9Ω 1/16W J	
R634	NRSA63J-3R9X	MG RESISTOR	3.9Ω 1/16W J	
R635	NRSA63J-100X	MG RESISTOR	10Ω 1/16W J	
R636	NRSA63J-151X	MG RESISTOR	150Ω 1/16W J	
R651	NRSA63J-472X	MG RESISTOR	4.7kΩ 1/16W J	

⚠ Symbol No.	Part No.	Part Name	Description	Local
R652	NRSA63J-0R0X	MG RESISTOR	0Ω 1/16W J	
R653	NRSA63J-222X	MG RESISTOR	2.2kΩ 1/16W J	
R654	NRSA63J-823X	MG RESISTOR	82kΩ 1/16W J	
R655	NRSA63J-105X	MG RESISTOR	1MΩ 1/16W J	
R656	NRSA63J-104X	MG RESISTOR	100kΩ 1/16W J	
R657	NRSA63J-821X	MG RESISTOR	820Ω 1/16W J	
R658	NRSA63J-0R0X	MG RESISTOR	0Ω 1/16W J	
R659	NRSA63J-153X	MG RESISTOR	15kΩ 1/16W J	
R661	NRSA63J-153X	MG RESISTOR	15kΩ 1/16W J	
R662	NRSA02J-101X	MG RESISTOR	100Ω 1/10W J	
R664	NRSA63J-0R0X	MG RESISTOR	0Ω 1/16W J	
R665	NRSA63J-681X	MG RESISTOR	680Ω 1/16W J	
R666	NRSA63J-561X	MG RESISTOR	560Ω 1/16W J	
R667	NRSA63J-681X	MG RESISTOR	680Ω 1/16W J	
R668	NRSA63J-561X	MG RESISTOR	560Ω 1/16W J	
R669	NRSA63J-102X	MG RESISTOR	1kΩ 1/16W J	
R671	NRSA63J-333X	MG RESISTOR	33kΩ 1/16W J	
R672	NRSA63J-102X	MG RESISTOR	1kΩ 1/16W J	
R673	NRSA63J-102X	MG RESISTOR	1kΩ 1/16W J	
R674	NRSA63J-102X	MG RESISTOR	1kΩ 1/16W J	
R675	NRSA63J-102X	MG RESISTOR	1kΩ 1/16W J	
R676	NRSA63J-0R0X	MG RESISTOR	0Ω 1/16W J	
R678	NRSA63J-0R0X	MG RESISTOR	0Ω 1/16W J	
R679	NRSA63J-0R0X	MG RESISTOR	0Ω 1/16W J	
R681	NRSA63J-103X	MG RESISTOR	10kΩ 1/16W J	
R682	NRSA63J-391X	MG RESISTOR	390Ω 1/16W J	
R801	NRSA63J-472X	MG RESISTOR	4.7kΩ 1/16W J	
R802	NRSA63J-222X	MG RESISTOR	2.2kΩ 1/16W J	
R803	NRSA63J-562X	MG RESISTOR	5.6kΩ 1/16W J	
R805	NRSA63J-222X	MG RESISTOR	2.2kΩ 1/16W J	
R806	NRSA63J-222X	MG RESISTOR	2.2kΩ 1/16W J	
R807	NRSA63J-562X	MG RESISTOR	5.6kΩ 1/16W J	
R809	NRSA63J-223X	MG RESISTOR	22kΩ 1/16W J	
R811	NRSA63J-153X	MG RESISTOR	15kΩ 1/16W J	
R812	NRSA63J-102X	MG RESISTOR	1kΩ 1/16W J	
R814	NRSA63J-183X	MG RESISTOR	18kΩ 1/16W J	
R815	NRSA63J-153X	MG RESISTOR	15kΩ 1/16W J	
R816	NRSA63J-562X	MG RESISTOR	5.6kΩ 1/16W J	
R821	NRSA63J-473X	MG RESISTOR	47kΩ 1/16W J	
R851	NRSA63J-333X	MG RESISTOR	33kΩ 1/16W J	
R852	NRSA63J-333X	MG RESISTOR	33kΩ 1/16W J	
CN601	QGF0527F2-15W	CONNECTOR	FFC/FPC (1-15)	
CN602	QGF1036F1-05	CONNECTOR	FFC/FPC (1-5)	
CN651	QGF1036F1-17	CONNECTOR	FFC/FPC (1-17)	
K251	NQR0007-002X	FERRITE BEADS		
K252	NQR0007-002X	FERRITE BEADS		
K654	NQR0007-002X	FERRITE BEADS		
SW601	QSW1047-002	PUSH SWITCH		
X251	QAX0684-001Z	C RESONATOR	8.38MHz	
X651	NAX0476-001X	CRYSTAL	33.8688MHz	

CD loading switch board

Block No. [0][4]

⚠ Symbol No.	Part No.	Part Name	Description	Local
CN1	QGF1016F3-05	CONNECTOR	FFC/FPC (1-5)	
S1	QSW1074-001	DETECT SWITCH		

Packing materials and accessories parts list

Block No. M 3 M M

No additional / supplemental order of WARRANTY CARDs are available.

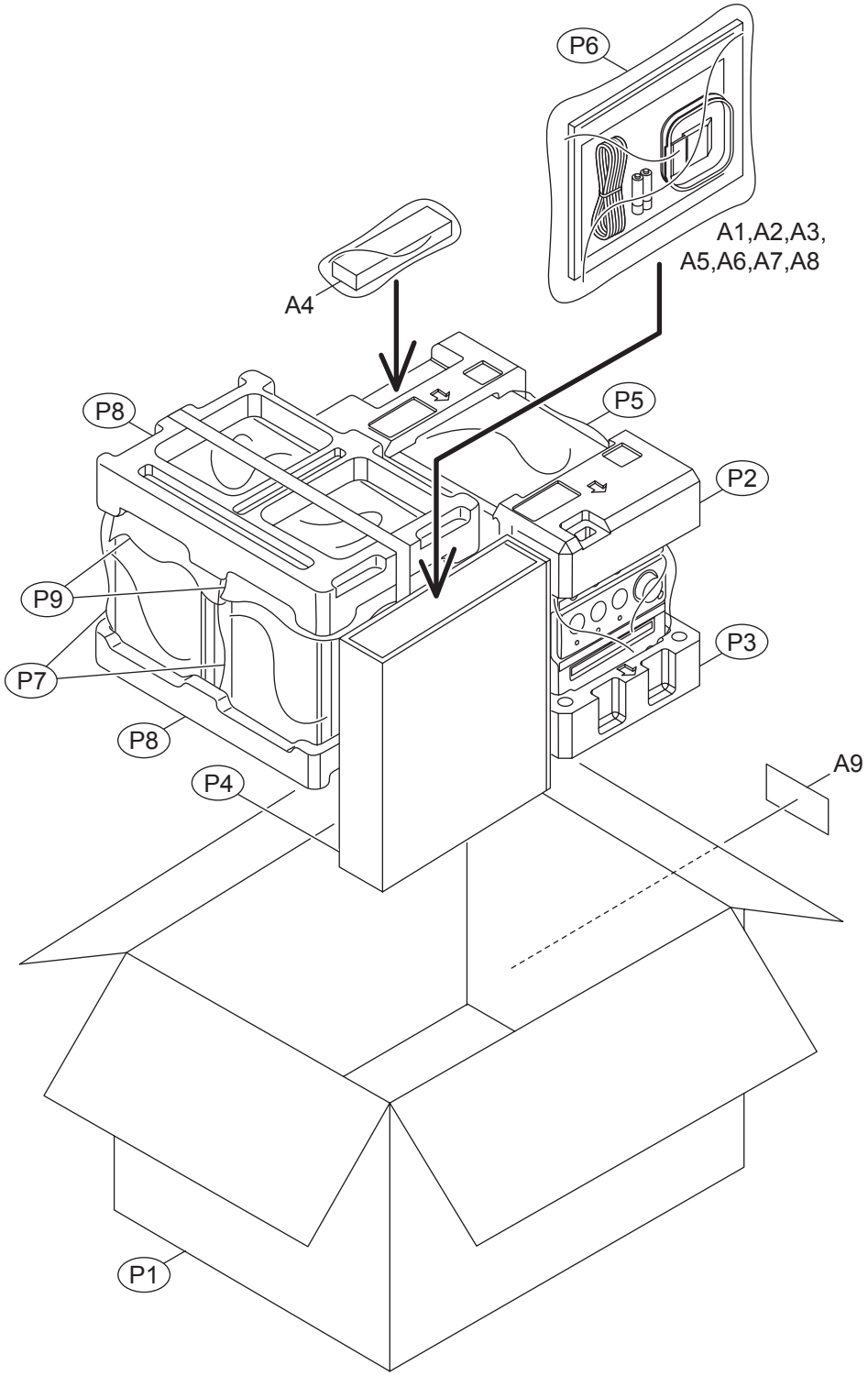

Packing and Accessories

Block No. [M][3][M][M]

⚠	Symbol No.	Part No.	Part Name	Description	Local
	A 1	GVT0171-001A	INST BOOK	ENG	G33B,G30B
	A 1	GVT0171-002A	INST BOOK	GER FRE DUT ITA	G33E,G30E
	A 1	GVT0171-003A	INST BOOK	SWE FIN DAN SPA POR	G33EN,G30EN
	A 1	GVT0171-004A	INST BOOK	CZE POL HUN	G33EV,G30EV
	A 2	QAL0014-003	AM LOOP ANT		
	A 3	QAL0457-001	ANT.WIRE		
	A 4	RM-SUXG30R	REMOCON UNIT		
	A 5	----------	BATTERY	(x2)	
	A 6	----------	WARRANTY CARD	BT-54028-1	
	A 7	GV30898-001A	I.B. LABEL		
	A 8	VNA3000-204	REGIST CARD		G33B,G30B
	A 9	GV30892-001A	COMPUTER LABEL		
	P 1	GV20439-004A	CARTON ASSY		G33B,G33E,G33EN,G33EV
	P 1	GV20401-004A	CARTON ASSY		G30B,G30E,G30EN,G30EV
	P 2	GV10299-001A	CUSHION UPPER		
	P 3	GV10298-001A	CUSHION BOTTOM		
	P 4	GV30852-001A	CARTON SPACER		
	P 5	QPC05006515P	POLY BAG	50cm x 65cm	
	P 6	QPC02503515P	POLY BAG	25cm x 35cm	
	P 7	700-120104-10	POLY BAG	(x2)	
	P 8	720-PUXG30-00	CUSHION	(x2)	
	P 9	715-220008-00	MIRAMAT SHEET	(x2)	